Item ID Number	00376
Author	Harrington, John J.
Corporate Author	Defense Technology Laboratories, FMC Corporation
Report/Article Title	Spray Tank Unit, Aircraft, PAU-8/A
Journal/Book Title	
Year	1971
Month/Day	April
Color	☐
Number of Images	145
Descripton Notes	Alvin L. Young had this item filed under the category "Equipment - How Developed, How Used"; contract no. F08635-68-C-0090, task no. 07, work unit no. 00

Harrington, J. J., D-22
1971

Spray Tank Unit Aircraft, PAU-8/A

AD 892614

AD892614

Spray Tank Unit, Aircraft, PAU-8/A (Apr 71)

Harrington, J. J.

1 OF 3

AD892614

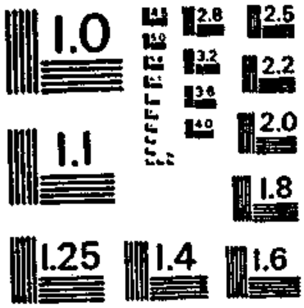

MICROCOPY RESOLUTION TEST CHART
NATIONAL BUREAU OF STANDARDS-1963-A

L

AFATL-TR-71-46

SPRAY TANK UNIT, AIRCRAFT, PAU-8/A

DEFENSE TECHNOLOGY LABORATORIES
FMC CORPORATION

TECHNICAL REPORT AFATL-TR-71-46

APRIL 1971

TEST + EVALUATION

Distribution limited to U. S. Government agencies only; ~~this report documents the design, development, fabrication, and testing of military hardware~~; distribution limitation applied April 1971. Other requests for this document must be referred to the Air Force Armament Laboratory (DLIF), Eglin Air Force Base, Florida 32542.

AIR FORCE ARMAMENT LABORATORY

AIR FORCE SYSTEMS COMMAND • UNITED STATES AIR FORCE

EGLIN AIR FORCE BASE, FLORIDA

Spray Tank Unit, Aircraft, PAU-8/A

John J. Harrington

TEST + EVALUATION

Distribution limited to U. S. Government agencies only; ~~this report documents the design, development, fabrication, and testing of military hardware;~~ distribution limitation applied April 1971. Other requests for this document must be referred to the Air Force Armament Laboratory (DLIF), Eglin Air Force Base, Florida 32542.

FOREWORD

This report documents work performed by the Defense Technology Laboratories (DTL) of the FMC Corporation, San Jose, California, under Contract F08635-68-C-0090, with the Air Force Armament Laboratory, Eglin Air Force Base, Florida. Program monitors for the Armament Laboratory were Mr. Michael E. Flynn and Captain Harold L. Hebert (DLIF).

This design, development, fabrication and testing of the Spray Tank Unit, Aircraft, PAU-8/A, was conducted from 17 May 1968 through 28 February 1971 by DTL under the direction of Mr. A. H. Bussey, Program Manager and Mr. John J. Harrington, Project Engineer. Technical personnel assigned to the program were Messrs. L. R. Ramsauer, F. A. Hettinger, D. N. Singletary, R. W. Triebel, D. E. Knutsen, G. A. Powell and A. R. Janes.

This report has been reviewed and is approved.

Franklin C. Davies, Colonel, USAF
Chief, Flame, Incendiary and Explosives
Division

ABSTRACT

A modular spray system for anticrop chemicals was designed, developed, fabricated and tested. The system is capable of external carriage on high and low performance aircraft in four possible configurations using either one, two, three, or four modules. Each of the 50-gallon modules is completely interchangeable and can spray at rates from 15 to 150 gallons per minute. The modules use a compressed-air/gas reservoir to pressurize the agent reservoir and force the agent out the nozzle. Support equipment, designed and delivered with the dispenser, included the loading and handling adapter kit for the MJ-1 and MHU-83E bomb lift trucks, the checkout unit, and the anticontamination kit for use with the F-4 aircraft. Nozzle tests were conducted from aircraft at 198 to 504 knots. Droplet sizes of 105 to 555 micron mmd were obtained with the single module configuration at air speeds of 214 to 354 knots. Full scale flow model tests of the agent tank lead to the development of a module which expels 99 percent of the agent from the module at a flow rate of 150 gallons per minute. Scale wind tunnel and jettison flight tests were conducted to support the design of a stable two-module configuration.

TEST + EVALUATION

Distribution limited to U. S. Government agencies only; ~~this report documents the design, development, fabrication and testing of military hardware;~~ distribution limitation applied April 1971. Other requests for this document must be referred to the Air Force Armament Laboratory (DLIF), Eglin Air Force Base, Florida 32542.

TABLE OF CONTENTS

TABLE OF CONTENTS (CONCLUDED)

LIST OF FIGURES

LIST OF FIGURES (Continued)

LIST OF FIGURES (Continued)

LIST OF TABLES

SECTION I

INTRODUCTION

This final report describes the work performed in the design, development, fabrication and testing of an Aircraft Spray Tank Unit, PAU-8/A. (Prior to 29 June 1970, the PAU-8/A was known as the TMU-66/A, Chemical Anticrop Dispenser, and is referred to by that name in some portions of this report.)

The program documented herein was conducted for the purpose of improving the design of a previously developed spray tank. The design improvement was for a chemical anticrop spray tank of modular design, consisting of nose cone, identical liquid container modules, module mating assembly, tail cone, liquid transfer and power unit, and dissemination apparatus.

The system is capable of operating in four configurations, using either one, two, three, or four modules, which can be operated either simultaneously or in sequence. The four-module configuration has a capacity of 200 gallons (50 gallons per module). All modules are equipped with both 14- and 30-inch lug suspensions and all are completely interchangeable. The tank is suitable for external carriage on high and low performance ground support aircraft employed in counterinsurgency (COIN) and tactical operations. The system provides the capability of attacking both large and small crop-growing areas.

Under this program a dispenser was designed; subsystems, models and full scale prototypes were fabricated and tested for performance; and test items were delivered to the Air Force for R&D Engineering Tests.

Subjects discussed in this report include development of the module, module adapter, dispenser test unit, loading and handling adapter, shipping container, contamination, subsystems testing, and system demonstration testing.

SECTION II

SYSTEM DESCRIPTION

2.1 PURPOSE OF THE EQUIPMENT

The Aircraft Spray Tank Unit, PAU-8/A, is used for delivering chemical anticrop agents. The system is designed for external carriage on high and low performance ground support aircraft employed in counterinsurgency (COIN) and tactical operations and provides the capability of attacking both large and small crop-growing areas.

2.2 GENERAL DESCRIPTION

The PAU-8/A (Figure 1 and Figure 2) is of modular construction. Each module is capable of being used as a spray tank since each contains the necessary controls, valves, pylon attachments, nozzles, etc. for disseminating anticrop agents. The system can also be used in a two-, three-, or four-module configuration. Thus, the PAU-8/A can be arranged to match the load carrying ability of the aircraft pylon selected for use. An adapter is provided to assemble the modules whenever multiple-module configurations are required. The assembly requires an appropriate set of fins and electrical interconnections. Figure 1 depicts fin arrangements and principal dimensions.

The spray tank is designed for use on the F-4, F-100, F-105, F-111, A-1E, A-7, and A-26 aircraft, and may be used on other aircraft where adequate clearance and suitable pylons exist. Aircraft electrical provisions are required for operating the tank.

Each module consists of a fifty-gallon agent tank, a transfer system, an electrical control system, and a dissemination valve and nozzle. The agent tank is 13 inches in diameter, 106 inches long, and is fabricated from aluminum forging, castings, and rolled sheet aluminum. The interior of the tank has a protective coating to prevent the corrosive action of the anticrop agents from attacking the tank interior.

The transfer system consists of a compressed-air/gas pressure reservoir, an arming valve, two check valves, a pressure switch, pressure regulator, low-pressure relief valve, charging valve, filter, pressure gage, high-pressure relief valve, and two bleed valves. These items, along with the electrical control system, are located at the forward end of the module and are housed in the forward fairing inclosure. A pneumatically

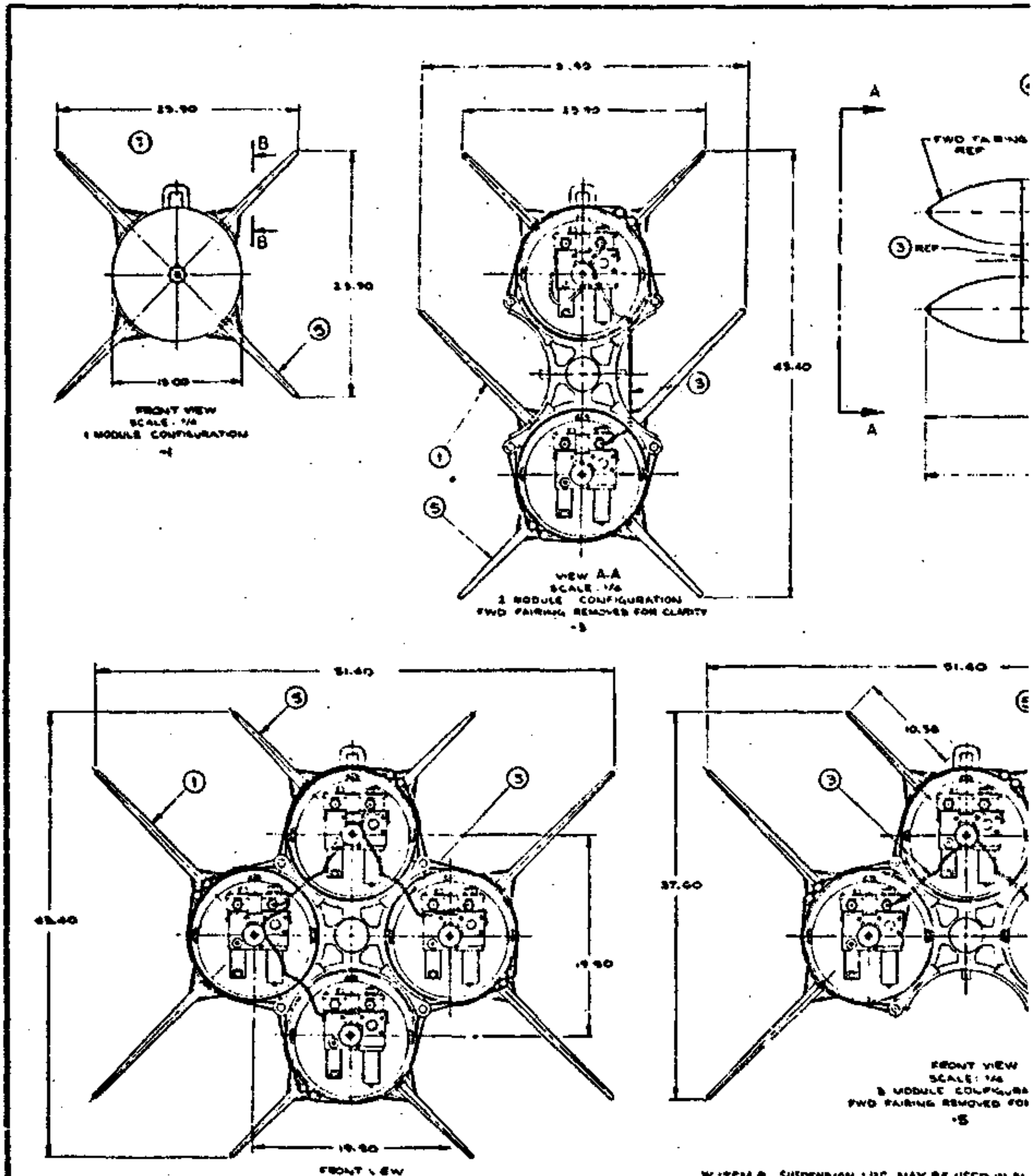

Figure 1. Aircraft Spray

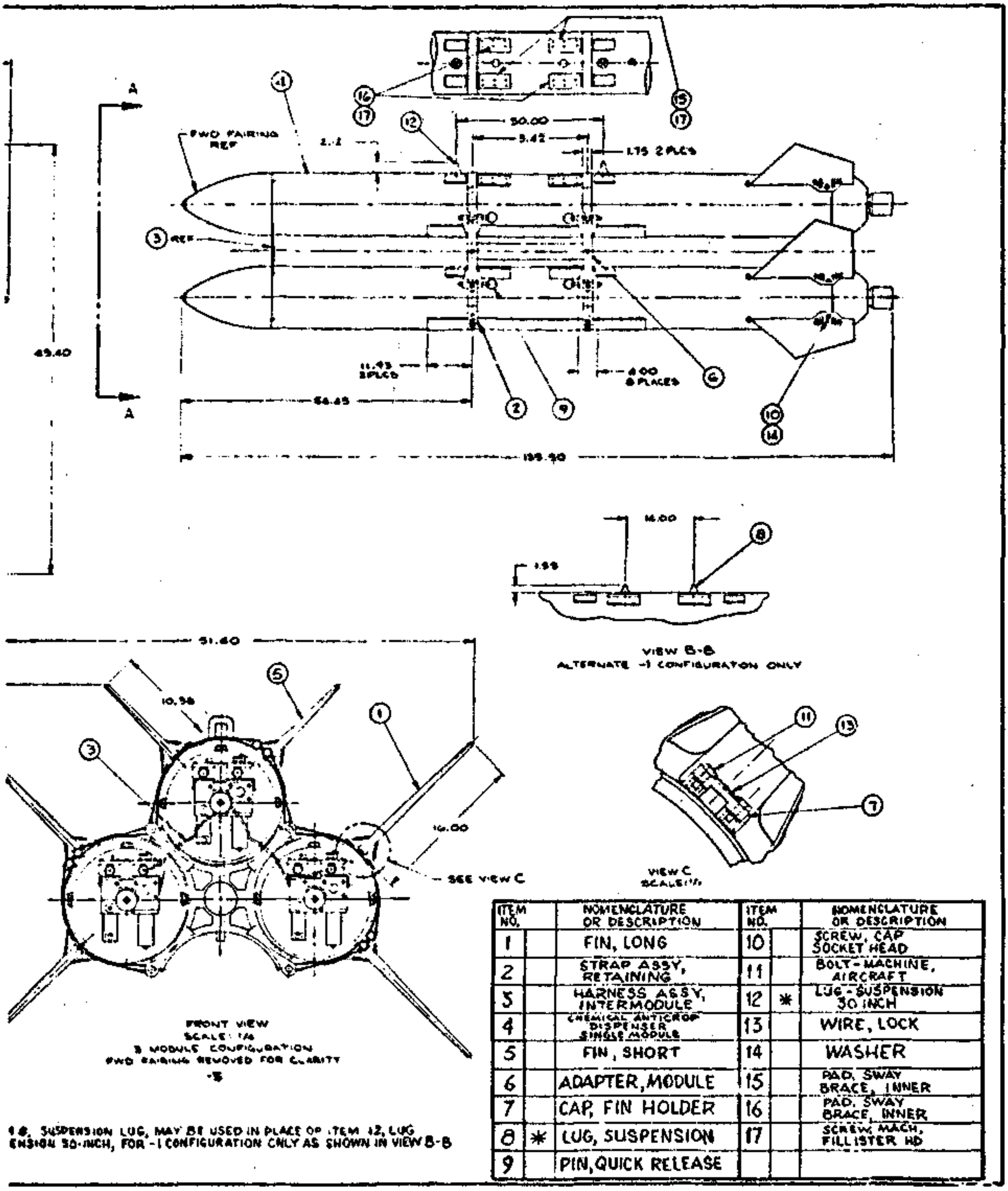

ITEM NO.		NOMENCLATURE OR DESCRIPTION	ITEM NO.		NOMENCLATURE OR DESCRIPTION
1		FIN, LONG	10		SCREW, CAP SOCKET HEAD
2		STRAP ASSY, RETAINING	11		BOLT-MACHINE, AIRCRAFT
3		HARNESS ASSY, INTERMODULE	12	*	LUG-SUSPENSION 30 INCH
4		CHEMICAL ANTICROP DISPENSER SINGLE MODULE	13		WIRE, LOCK
5		FIN, SHORT	14		WASHER
6		ADAPTER, MODULE	15		PAD, SWAY BRACE, INNER
7		CAP, FIN HOLDER	16		PAD, SWAY BRACE, INNER
8	*	LUG, SUSPENSION	17		SCREW, MACH, FILLISTER HD
9		PIN, QUICK RELEASE			

* 8, SUSPENSION LUG, MAY BE USED IN PLACE OF ITEM 12, LUG ENSION 30-INCH, FOR -1 CONFIGURATION ONLY AS SHOWN IN VIEW B-B

: 1. Aircraft Spray Tank Unit, PAU-8/A

(The reverse of this page is blank.)

2

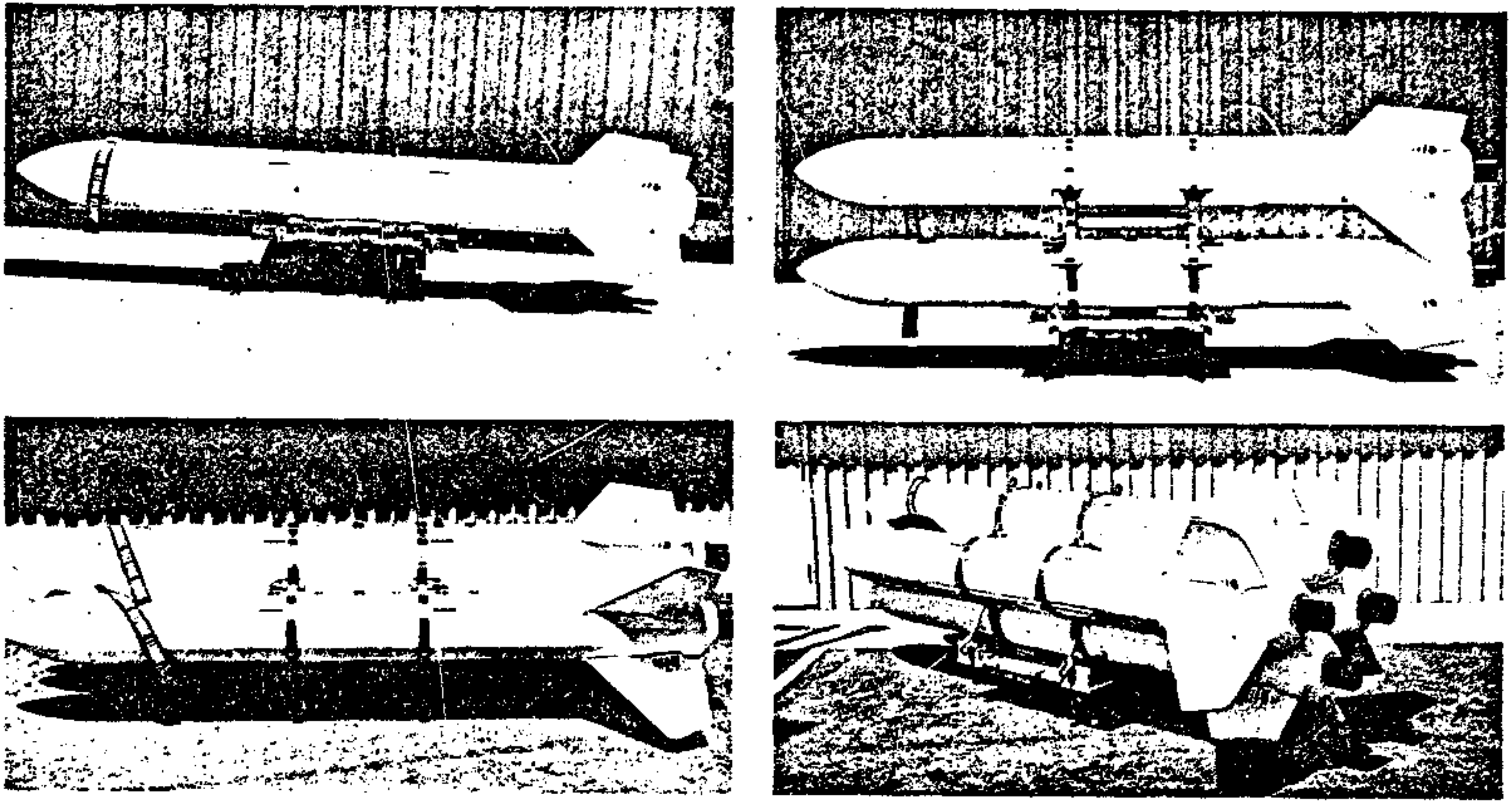

Figure 2. Aircraft Spray Tank Unit, PAU-8/A
(Four Configurations)

operated valve provides the on-off control for dissemination, and an adjustable nozzle is mounted at the aft end of the module. An aft aluminum fairing inclosure is provided for the valve and nozzle.

Operation of the system requires two actions by the pilot: (1) Closing a cockpit arming switch which arms the system and releases stored high-pressure air/gas into the agent tank at a regulated pressure, and (2) depressing the "pickle button" on the pilot control stick which opens the dissemination valve and allows the agent under pressure to be directed to the nozzle assembly. Dissemination continues until the pilot releases the button which closes the dissemination valve. Nozzle adjustment is set prior to flight to vary the flow rate (from 15 to 150 gallons per minute per module). The modules in the multi-module configuration can be operated simultaneously or in sequence.

2.3 PHYSICAL DATA AND OPERATIONAL CHARACTERISTICS

Physical data and operational characteristics of the system are shown in Table I.

2.4 DETAILED DESCRIPTION OF SPRAY SYSTEM

Equipment furnished for the PAU-8/A system includes the spray tank unit (Multi-Module), an electrical test unit (Figure 3), loading and handling adapter assembly (Figure 4), and turning vane kit (Figure 5).

2.4.1 Spray Tank

2.4.1.1 Construction - General

Each of the four modules of the PAU-8/A contains the necessary controls, valves, pressure reservoir, pylon attachments, nozzles, etc. for disseminating chemical anticrop agents. The module consists of a tank assembly which stores the agent, a pneumatic system which pressurizes the agent tank, and the agent-dispensing system for control of agent dispersal.

Interconnection of the aircraft control system and the PAU-8/A system is provided through an electrical connector mounted in a well aft of the mounting lugs. The assembly of a two-, three-, or four-module configuration requires a module

TABLE I. PHYSICAL DATA AND OPERATIONAL CHARACTERISTICS

PHYSICAL DATA	SINGLE MODULE DISPENSER	TWO-MODULE DISPENSER	THREE-MODULE DISPENSER	FOUR-MODULE DISPENSER
Store (overall)				
Length	135.5 Inches	135.5 Inches	135.5 Inches	135.5 Inches
Maximum Diameter	13 Inches	32.5 Inches	32.5 Inches	32.5 Inches
Weight				
Modules	214 Pounds	429 Pounds	644 Pounds	858 Pounds
Small Fins	12 Pounds	12 Pounds	6 Pounds	12 Pounds
Large Fins		8 Pounds	16 Pounds	16 Pounds
Mating Assembly		31 Pounds	31 Pounds	31 Pounds
Straps		15 Pounds	22 Pounds	30 Pounds
Weight Total (Empty)	226 Pounds	495 Pounds	719 Pounds	947 Pounds
Agent (1.0 Specific Gravity)	436 Pounds	872 Pounds	1308 Pounds	1744 Pounds
Weight Filled (1.0 Specific Gravity)	662 Pounds	1367 Pounds	2027 Pounds	2691 Pounds
Agent (1.2 Specific Gravity)	524 Pounds	1046 Pounds	1572 Pounds	2096 Pounds
Weight Filled (1.2 Specific Gravity)	750 Pounds	1543 Pounds	2291 Pounds	3043 Pounds
Agent (1.4 Specific Gravity)	610 Pounds	1220 Pounds	1830 Pounds	2440 Pounds
Weight Filled (1.4 Specific Gravity)	836 Pounds	1715 Pounds	2549 Pounds	3387 Pounds
Agent Capacity	50 Gallons	100 Gallons	150 Gallons	200 Gallons
Lugs (Per Mil-Std-8591)	14 & 30 Inches	30 Inches	30 Inches	30 Inches
No. of Fins Required	4 Small	4 Small 2 Large	2 Small 4 Large	4 Small 4 Large
Center of Gravity Position				
Center of Gravity Empty	STA. 65.9	STA. 65.5	STA. 64.9	STA. 64.8
Center of Gravity Full (1.0 Specific Gravity)	STA. 69.2	STA. 69.0	STA. 68.8	STA. 68.8
Agent Flow Rate	15 -150GPM	15 -300GPM	15 -450GPM	15 -600GPM
Electrical Data	28 VDC 1 Amp	28 VDC 2 Amp	28 VDC 3 Amp	28 VDC 4 Amp
Shipping Container	None	None	None	151 3/4" Long 33 1/4" Wide 41 3/8" High

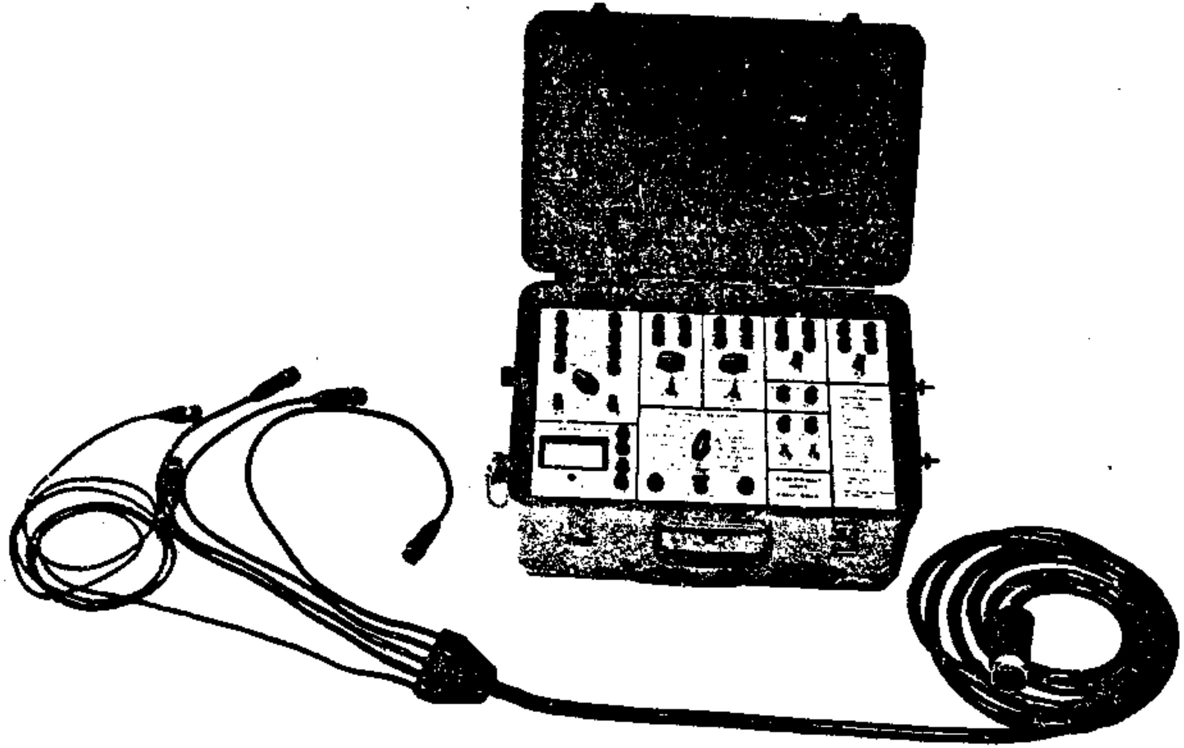

Figure 3. Electrical Test Unit

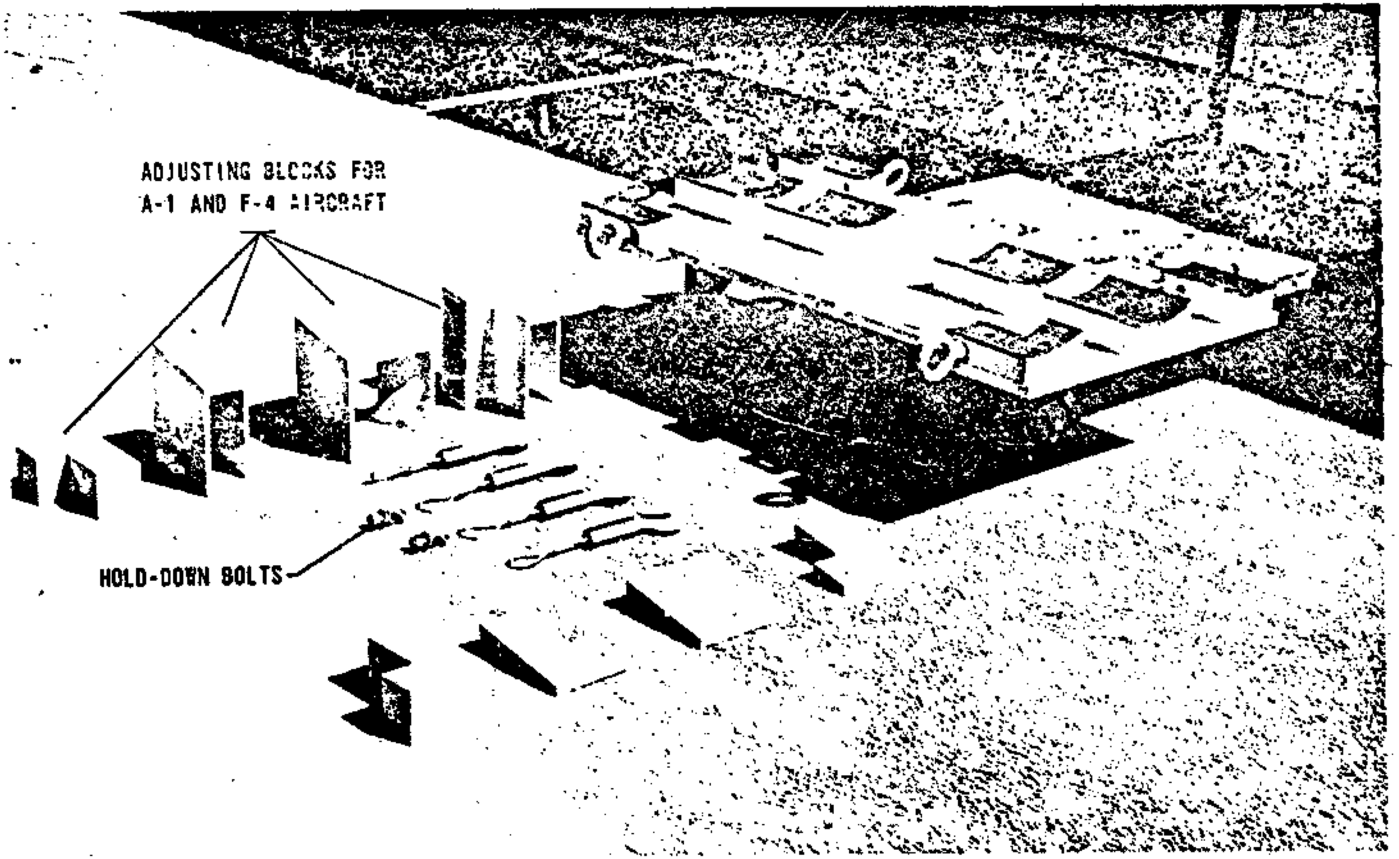

Figure 4. Loading and Handling Adapter Assembly (Modification Kit for MJ-1 and MHU-83/E Bomb Lift Trucks)

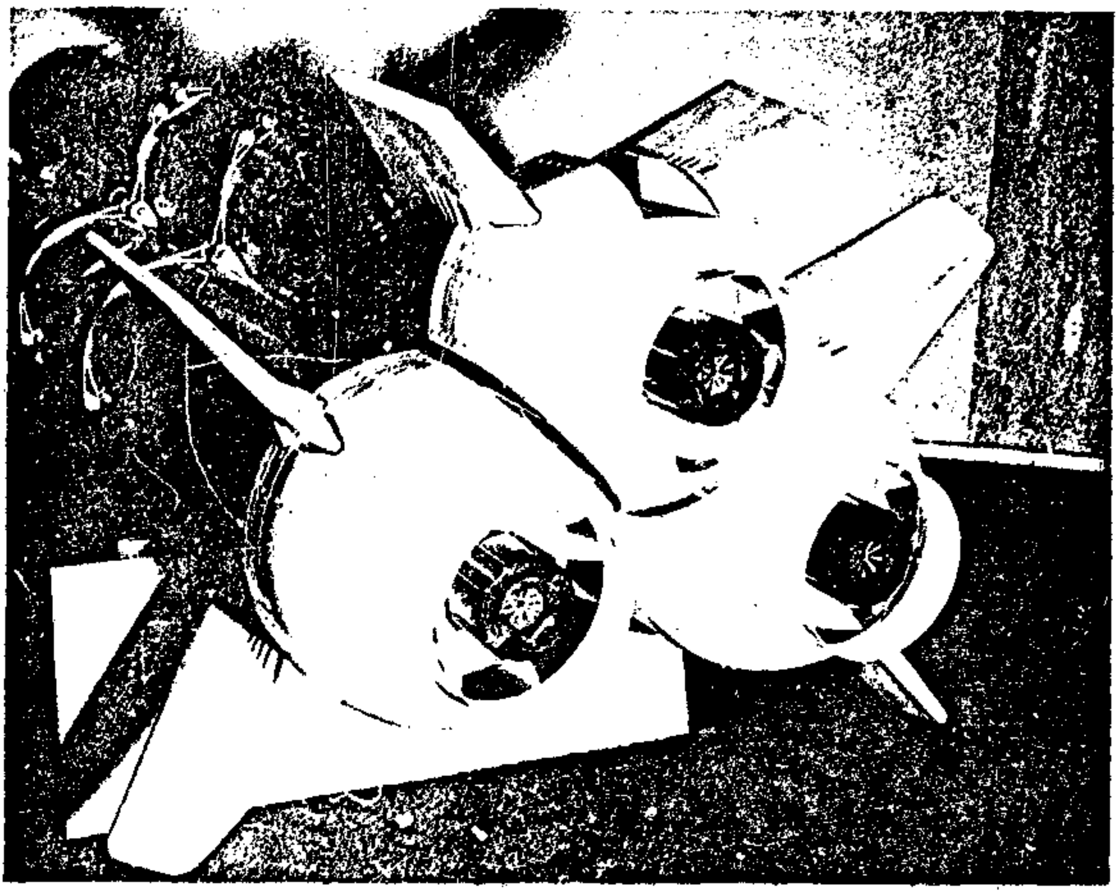

Figure 5. Turning Vane Kit

adapter. Two high-strength stainless steel straps are used to attach each module to the adapter.

2.4.1.2 Tank Assembly

The tank assembly (Figure 6) of the module is 13 inches in diameter and approximately 106 inches long, fabricated from aluminum forging, castings, and rolled sheet metal. The hardback is an aluminum forging containing provisions for 14-inch and 30-inch lugs for attaching the dispenser to the aircraft pylon. Two band-support bulkheads are welded to the hardback forgings to support the tank when assembled to the module adapter. The inner tank or settling chamber, with a capacity of approximately seven gallons, is located between these two bulkheads.

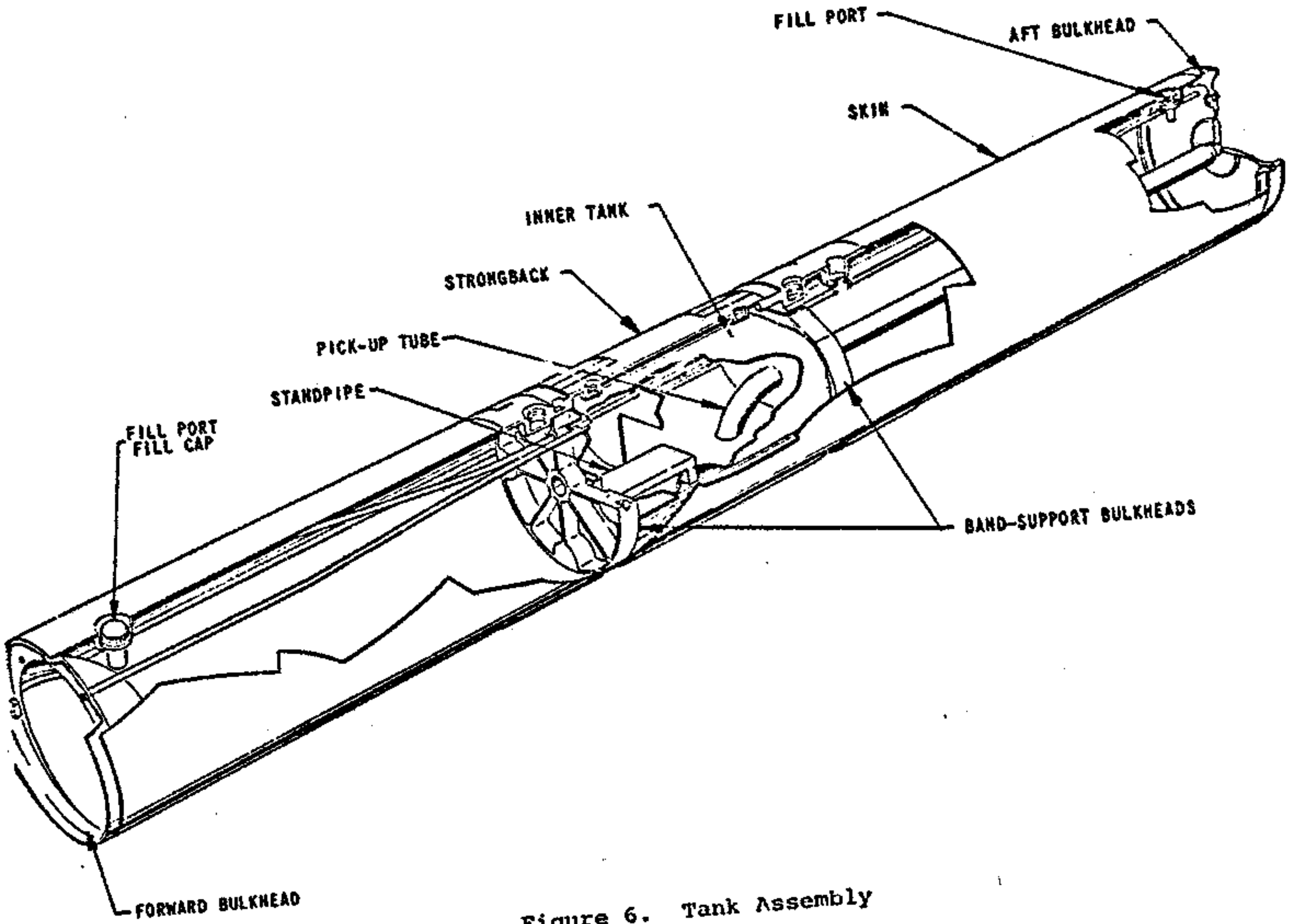

Figure 6. Tank Assembly

The skin is a 1/8-inch aluminum rolled sheet fitting around the band-support bulkheads and butting against the hardback. The skin is welded to the bulkheads and hardback. The tank is closed at the aft end by an aluminum casting welded to the skin. The forward end is closed with a drawn aluminum bulkhead welded to the skin. A pick-up tube runs from the inner tank to the aft bulkhead and is welded to the rear band support bulkhead and the aft bulkhead.

The end bulkheads contain provisions for mounting the pressure reservoir with attached valves, electrical control box, and nozzles. The tank also contains fore and aft filler caps and fin attachment provisions. The inside is coated to protect the aluminum from the corrosive action of the agent.

2.4.1.3 Agent Transfer System (Pneumatic System)

The pneumatic system (Figure 7) consists of a 3,000 psi pressure reservoir, an arming valve, two check valves, a filler valve, a pressure gage, a pressure switch, pressure regulator valve, low-pressure relief valve, and a high-pressure relief valve. These items, along with the electrical junction box, are located at the forward end of the module and are housed in the forward fairing. Two bleed valves are provided to vent the residual pressure in the agent tank prior to servicing the module. The fluid-transport-system schematic (Figure 8) shows the arrangement of the equipment.

The pressure reservoir is attached to the front bulkhead of the tank by six screws. A single bolt retains the forward fairing. The aft end of the forward fairing rests against the skin of the tank. The arming valve, pressure regulator and interconnecting piping are attached to a mounting plate which is bolted to the pressure reservoir.

2.4.1.4 Agent Dispensing

The dispensing system (Figure 9) consists of a dissemination control valve (shut-off valve) and the adjustable nozzle located at the aft end of the agent tank. The dissemination control valve, housed in the aft fairing, is operated by pneumatic pressure piped from the pressure reservoir.

The nozzle and dissemination valve are attached to the aft bulkhead with four bolts. The aft fairing engages the rear bulkhead and is attached to the nozzle by four screws.

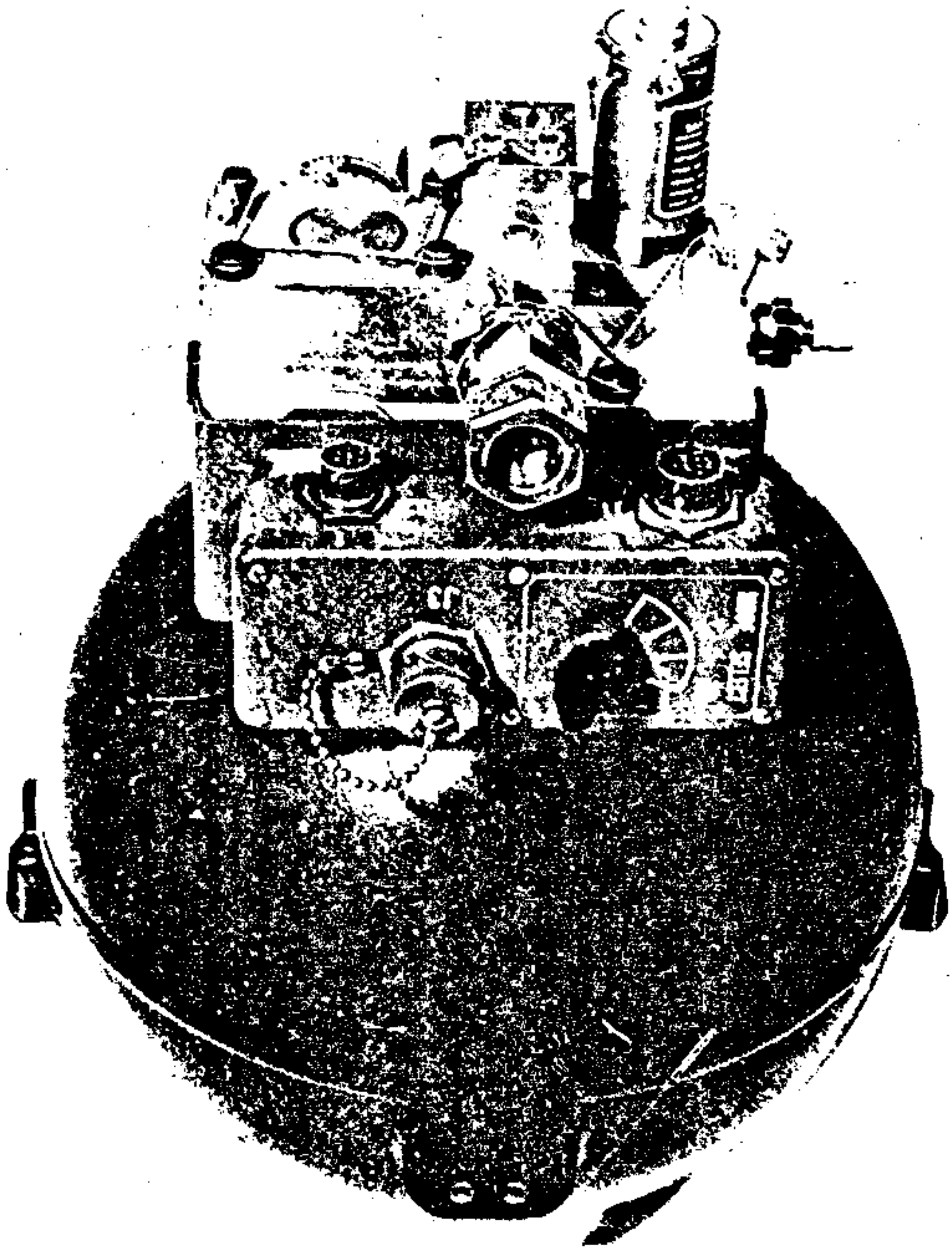

Figure 7. Agent Transfer System

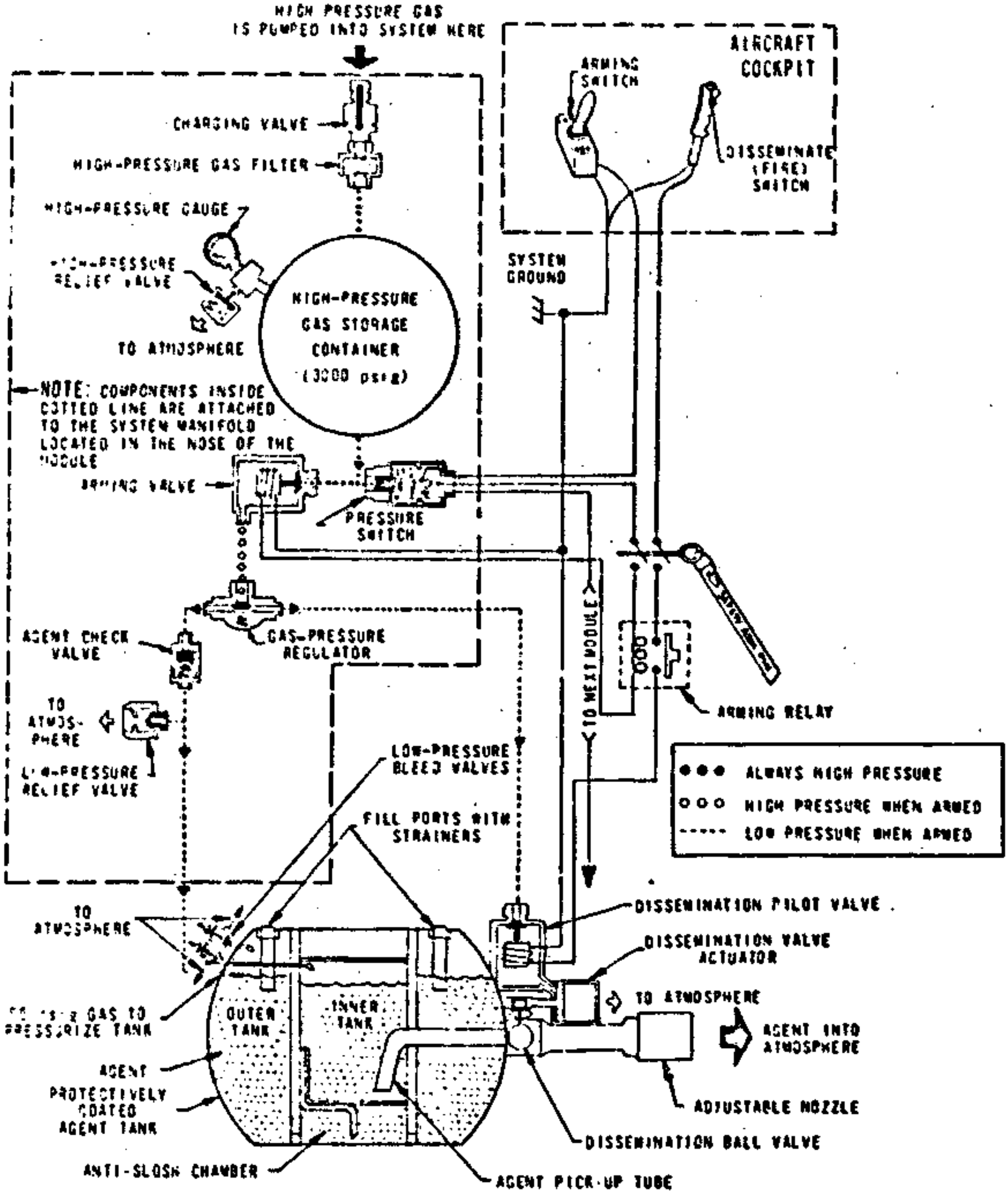

Figure 8. PAU-8/A System Schematic

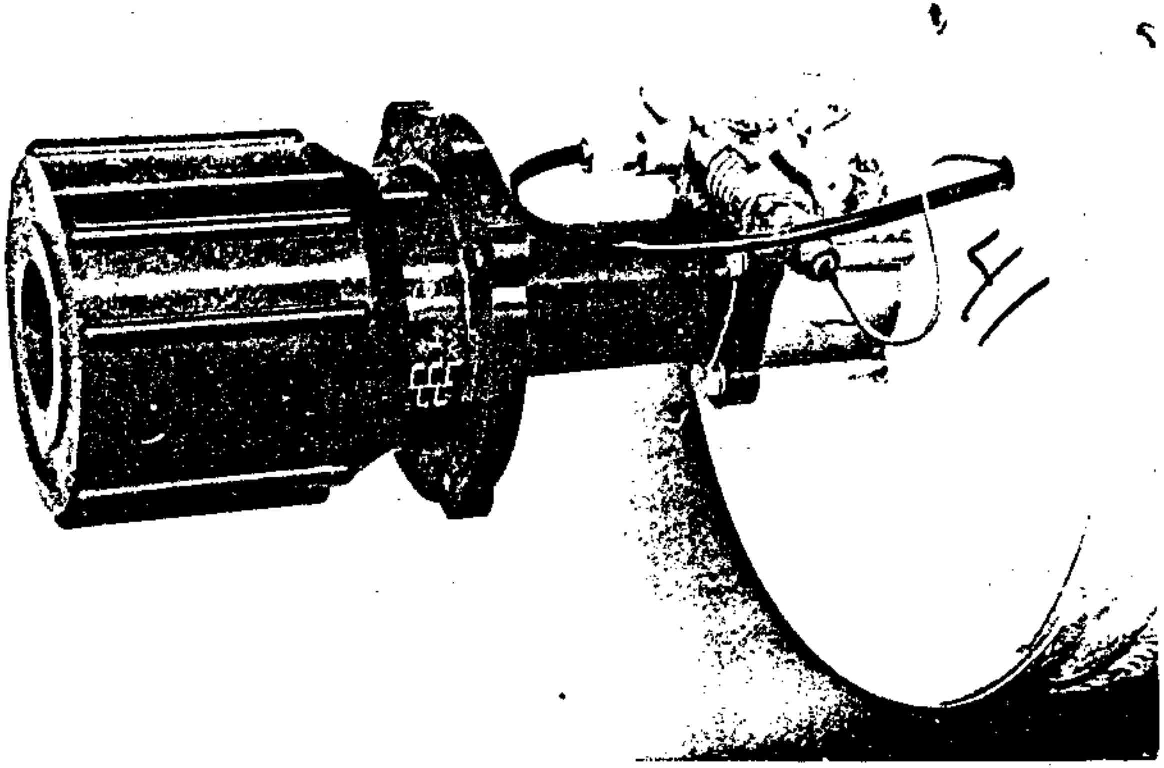

Figure 9. Agent Dispensing System

2.4.1.5 Module Adapter Assembly

The module adapter consists of two castings joined together with a tube. The forward casting contains four locator pins to mate with the modules. The straps for nolding the modules are attached to each casting of the adapter by ball-lok pins.

2.4.2 Principles of Operation

2.4.2.1 Basic Principles

The operating principle of the system consists of pressurizing the agent tank with filtered air or nitrogen which forces the agent to flow from the tank through the adjustable spray nozzle.

A. Fill Ports - The tank can be filled through either the forward or the aft fill port. The fill ports are equipped with strainers to prevent the filler hoses from entering and damaging the inner coating of the tank and to prevent large foreign particles from entering the tank.

If the agent tank is pressurized above five psi, the filler caps cannot be removed until the tank is bled to about two psi. The bleed valves must be left open during agent filling to allow the air to bleed out of the inner tank; otherwise, the tank will not fill.

B. Tank Pressurization and Regulation - The pressure reservoir is filled through the charging valve located on the large manifold mounted on the reservoir. The gas going through the charging valve passes through a 10-micron filter before entering the pressure reservoir. The reservoir has a volume of 650 cubic inches and is charged from 1,200 psi to 3,000 psi, depending upon the operating temperature. A high-pressure gage mounted on the reservoir reads the pressure in the gas reservoir. The pressure reservoir has enough volume to go through a temperature cycle from +160°F to -65°F and still have enough pressure remaining to completely empty the agent tank at the low temperature.

The high-pressure relief valve, mounted on the reservoir next to the pressure gage, prevents the reservoir from being over-pressurized and allows gas to be relieved at high temperatures. The valve opens at 3,400 psi and reseats at 3,100 psi.

A pressure switch, mounted on the large manifold of the pressure reservoir, performs a switching function when the tank is empty. The switch opens at 250 ± 50 psi and remains open until the pressure in the reservoir drops to 200 ± 10 psi, at which time it closes.

The solenoid-operated arming valve is located in the large manifold and is controlled by the arming switch in the aircraft cockpit. Actuation of the arming valve allows the high pressure gas to flow to the pressure regulator located in the large manifold. The outlet operating-pressure of the regulator is 55 ± 5 psig; the nonflow or lock-up pressure outlet of the regulator is 71 psig.

There are two outlets from the regulator: one to the dissemination valve and the other to the agent tank. After the gas leaves the regulator on the way to the agent tank, it first passes through a check valve and then by a low-pressure relief valve. This low-pressure relief valve prevents over-pressurization of the tank in case of failure of the regulator. The valve cracks (opens) at 85 psig and reseats at 75 psig.

Before entering the agent tank, the regulated gas passes through a second check valve. A section of nylon tubing connecting this second check valve to the tank acts as a trap to reduce the amount of agent in contact with the seat on the check valve to prevent build-up of crystallized agent on the seat.The two bleed valves mounted on the forward bulkhead are for bleeding the pressure from the agent tank before the filler caps can be removed and for venting the internal settling chamber during filling.

C. <u>Dissemination Control Valve and Nozzle</u> - The dissemination control (shut-off) valve and nozzle are located at the aft end of the agent tank. This is a pneumatically operated ball valve whose operation is controlled by a solenoid-operated pilot valve through a piston, rack, and gear. The pilot valve controls regulated air piped from the regulator to the piston. Actuation of the pilot valve is controlled by the bomb switch (pickle button) located on the control stick of the aircraft. When the dissemination control valve is open, the pressurized air in the agent tank forces the agent into the settling chamber through the stand-pipe and out through the agent pick-up tube. The settling chamber allows the air mixed with the agent to separate from the agent before entering the agent pick-up tube, thus insuring that no air passes out of the nozzle until the agent tank is empty. This inner tank is the last to empty during dissemination and prevents the uncovering of the agent pick-up tube and subsequent loss of tank pressurization during the nose-up or -down flight.

The nozzle assembly, located aft of the dissemination control valve consists of a housing, diaphragm, and nozzle adjustment sleeve. The diaphragm is made of a flexible rubber over stiffeners and is threaded to the housing at the aft end. The nozzle adjustment sleeve is threaded to the housing and fits over the diaphragm. The nozzle is adjusted by screwing the sleeve in and out; two setting labels provide for adjustments from 0 to 16 and from 1 to 15.

When pressurized agent is flowing through the nozzle, it forces the flexible diaphragm to move back until the stiffeners come to rest against the nozzle sleeve. When the nozzle sleeve is screwed all the way in, the orifice in the diaphragm is small; screwing the sleeve out enlarges the orifice and adjusts the flow rate. The nozzle sleeve is held at the desired setting by a ball detent.

Two drain ports are provided in the agent tank; one is located in the bottom of the aft bulkhead for draining the main tank; the other is located in the side of the rear band-support bulkhead for draining the inner settling chamber. A third port is located in the upper rear of the aft bulkhead. This port is for a pressure gage to be used during calibration of the tank.

D. Electrical Control - The electrical circuitry (Figure 8) in the PAU-8/A consists of control circuitry for operating the arming and dispensing control valve. The control circuitry provides the means for arming the module and opening and closing the dissemination control valve. Operation is from the controls located in the aircraft cockpit. The circuitry includes a selector switch mounted in each module for selecting the mode of operating the multi-module system (simultaneous or sequential). The system utilizes 28 VDC supplied from the aircraft system.

Two control functions are required for arming and operation of the modules. The arming switch applies power to the arming circuit. When this circuit is energized, power is applied to the coil of the arming relay and to the solenoid of the arming valve which opens the valve and allows the agent tank to be pressurized.

Dissemination is obtained by operating the bomb release (pickle button) on the pilot's control column. This circuit, when energized, applies power through the arming relay to the dissemination solenoid control valve. When the bomb release switch is released, power is removed and the control solenoid closes, shutting off the flow of agent to the nozzles.

A selector mode switch is installed on a junction box assembly mounted in the forward end of each module. The selector switch provides four positions: Position No. 1 -- sequential module usage; Position No. 2 -- simultaneous usage of two modules, followed by the remaining two modules; Position No. 3 -- simultaneous usage of three modules, followed by the remaining module, and Position No. 4 -- simultaneous usage of all four modules. Although there is a selector switch in each module, only the top switch needs to be set to get the desired sequence. The remaining switches can be in any position without affecting the sequence.

Sequencing of the modules is achieved through the use of the pressure switch. When module pressure drops below 200 psi (agent tank empty), the switch moves to the NC position (normally closed), diverting power through the selector switch to the next module, or modules, in sequence.

The sequence of operation for two-, three-, and four-module dispensers is shown in Table II.

A safety switch (arming switch) is used to prevent aircraft power from inadvertently entering the system while on the ground. The safety switch is located on the forward bulkhead just aft of the nose fairing and is actuated by a quick release ball-lok pin, which is inserted through the top side of the module. A red "REMOVE BEFORE FLIGHT" streamer is attached to the switch actuation pin.

2.4.3 Shipping Container

The shipping container (Figure 10) is a wooden, wire-bound container fabricated from plywood and timber consisting of a base, side assembly, saddle and saddle retainer, and cover assembly. The side and ends are held together with wire and, when assembled, interlock into the base with a cleat at the bottom of the sides. The retainers are held in place on the base between blocking pieces. The saddles interlock in the retainers and are held to the dispenser by two 0.75 in by 0.023 inch straps. The fins are stowed in two boxes mounted to

TABLE II. SEQUENCE OF OPERATION

SWITCH POSITION	TYPE OF DISPENSING	TWO-MODULE CONFIGURATION	THREE-MODULE CONFIGURATION	FOUR-MODULE CONFIGURATION
1	Sequential	① ②	① ③ ②	① ③ ② ④
2	Simultaneous (Two Modules)	① ①	① ② ①	① ② ① ②
3	Simultaneous (Three Modules)	① ①	① ① ①	① ① ① ②
4	Simultaneous (Four Modules)	① ①	① ① ①	① ① ① ①

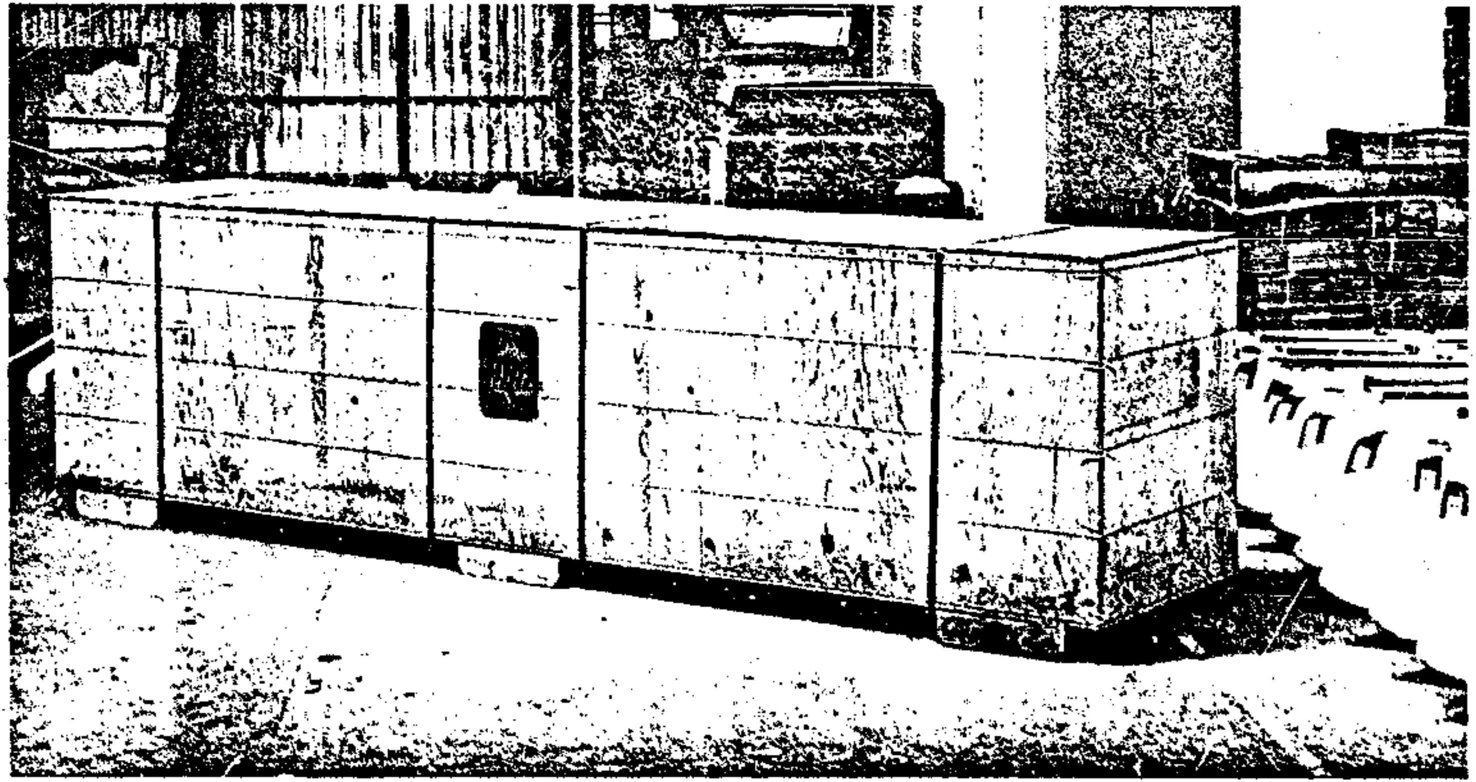

Figure 10. Shipping Container

the base and the covers to the fin storage compartments are held in place by one strap on each compartment. The container cover is secured by four straps which go around the entire container.

The four-module configuration is rotated 45 degrees from its normal upright position to reduce the storage and shipping volume of the container.

2.4.4 Dispenser Test Unit

A test unit (Figure 3) is used to aid in monitoring and functionally checking the system as well as for functional checks of the aircraft and pylon control circuitry.

2.4.5 Loading and Handling Adapter

Since the two-, three-, and four-module configurations will not fit on the standard adapters furnished with the MJ-1 and MHU-83/E bomb lift trucks, a special adapter is furnished with the system so that these two bomb lift trucks can be used to load any configuration on the aircraft. This loading and handling adapter allows the two-bomb lift trucks to load on the outboard stations of the F-4 (which have a 7-1/3-degree cant angle) and on the A1-E (which has an incidence angle of 10-1/2 degrees), as well as on other aircraft pylons.

2.4.6 Contamination Control Adapter Kit (Turning Vane)

This kit is supplied for use with the F-4 aircraft to reduce the spray contamination of the under side of the wing. The kit is designed for use with the three-module configuration.

SECTION III

MODULE DEVELOPMENT

3.1 MODULE REQUIREMENTS

- Deliver chemical anticrop agents, future chemical agents, and plant growth hormones.
- Be suitable for external carriage on high-and low-performance, ground-support aircraft employed in counterinsurgency and tactical operations.
- Be of modular design.
- Have identical liquid containers.
- Have a dissemination apparatus with off-on capability.
- Capable of operating in various configurations, using single modules and combinations of two, three, and four modules.
- Operate modules simultaneously or in sequence.
- Agent container modules shall be completely interchangeable.
- Four-module configuration shall have a capacity of at least 200 gallons.
- Modules shall be equipped with 14-inch and 30-inch lug suspensions.
- The number and combinations of modules shall be determined by the weight capability of the given station.
- Modules shall be readily and quickly filled and serviced while suspended on the aircraft.
- Be compatible with armament circuitry of each aircraft.
- Cause no appreciable degradation to the aircraft operational performance.
- Be capable of delivering agent with a specific gravity of 0.80 to 1.40 and pH within the range of 3.0 to 8.5.
- Capable of storage of agents for a minimum of six months.

- Capable of five-year storage with no loss of performance.
- At aircraft operational speeds of 200, 325, and 500 KIAS, be capable of disseminating a liquid agent with 1.4 specific gravity so that the spray will be mostly in the particle-size range of 200 to 400 microns mass median diameter (mmd) and with less than 10 percent by volume of the agent being outside the range of 100 to 500 microns mmd.
- Arming and dissemination shall be two separate and distinct actions.
- Dissemination shall continue until bomb switch is released.
- All configurations shall be capable of carriage to speeds of 1.5 Mach at 35,000 feet and up to Mach 0.90 at sea level.
- Function at speeds of 150 to 600 KIAS within load factor envelopes of MIL-A-8591C.
- Safe ejection from any aircraft station with minimum limitations to ejection speed of the aircraft.
- Capable of delivering agents at 25, 75, and 150 gallons per minute at speeds from 200 to 500 KIAS.
- All configurations shall be capable of simultaneous operation with minimum requirements for electrical power from the aircraft.
- The empty weight of one nose cone, one tail cone, one agent module and associated control and piping equipment shall not exceed 250 pounds.
- Minimum of three man-hour mean time to repair four modules.
- The failure rate of the item shall be no greater than 10 percent.
- Minimum of parts are to be for one time use.

3.2 AGENT TRANSFER SYSTEM

The purpose of the agent transfer system is to force the 50 gallons of agent through the dissemination nozzle and out the module into the atmosphere. In addition, the agent transfer system is also designed to:

- Occupy minimum space.
- Be light weight.
- Function with high reliability under a variety of environmental conditions.
- Require minimum maintenance.
- Be easily repaired.
- Provide a constant flow rate throughout a given setting.
- Control the flow of agent.
- Be safe to operate and service.

3.2.1 Fluid Control

Three basic methods of moving the agent were investigated:

- Pumping the agent out of the tank by an electrically or pneumatically driven pump.
- Containing the agent in a bladder and forcing it out by pneumatic or mechanical means.
- Pressurizing the agent in its tank by a pneumatic system and controlling the flow by the control valve.

An investigation of these methods indicated that the weight and power consumption of a pump system would be prohibitive, and that the cost of an effective bladder system would be much higher than that of a pressurized tank system. The designed agent transfer system stores enough compressed gas energy to force the agent out of a tank and to operate the agent flow control valve. To accomplish this function, the system must contain the following components:

- High pressure gas storage reservoir.
- Gas charging valve and filter.
- Gas pressure gage.
- High pressure relief valve.
- Pressure activated electrical switch.
- Electrically operated pneumatic control valve.
- Pneumatic pressure regulator.
- Low-pressure check valve.
- Low-pressure relief valve.
- Low-pressure bleed valve.

These components may be joined into a system in two ways. They may be connected together by pneumatic lines and fittings, or by a manifold which would connect and support the components. If there is no need to separate the individual components to fulfill the system function, a manifold offers the following advantages over pneumatic connecting lines: (1) higher reliability due to decreased susceptibility to vibration and shock and fewer external joints to develop leaks, (2) greater maintainability because of easier access to individual system elements, and (3) lower overall cost due to the reduction in the number of pneumatic fittings required, the greater reliability, and the reduced assembly and maintenance. Because it was both desirable and feasible to locate most of the components in the nose of the module, a manifold system was employed.

Tests were conducted on four GFE modules for the purpose of determining their operational qualities. These tests supported the selections of the above components. The tests indicated that:

- Failure of the burst plug used to prevent the tank from over-pressurization was due to fatigue.
- The fittings used to connect the system's components leaked.
- Failure of the arming valve allowed the agent tank to be pressurized before arming occurred.

- Failure of the check valve located between the arming solenoid and regulator allowed fluid to enter the arming valve and the dissemination pilot valve in the rear of the module.

The energy source of the agent transfer system is 3,000 psi nitrogen or air stored in the high-pressure container. The system is controlled by electrical signals initiated by the pilot.

Following is a breakdown of agent pneumatic transfer system components (Figure 11), explaining the function, performance requirements, and special features of each:

(1) The high-pressure gas storage reservoir is a hollow sphere, the two halves of which are drawn from shatter-proof steel and welded together. Lugs for bolting the sphere directly to the forward bulkhead of the module and bosses for attaching two manifolds are welded to the outside of the sphere. Each sphere is tested for weld integrity, heat treated, and then subjected to a series of pressure tests before it is accepted for use in the system. The sphere is designed to withstand 2-1/2 times the actual system pressure of 3,000 psig.

(2) The electrically-operated pneumatic control valve (arming valve) controls the flow of high pressure gas from the reservoir to the rest of the system. It is normally closed (to subject as few parts as possible to high pressure gas) except when the system is functioning. This reduces the hazard of damaging the aircraft if the module is damaged in flight, and reduces the number of potential leak points. When the arm switch is on, the arming valve opens, allowing pressurized gas to flow through the system into the agent tank. The system can be disarmed by turning the arming switch off. The valve is a spring return type and automatically closes when the solenoid is de-energized. This type of arming valve allows the pilot to disarm the system after it has been armed in the event the mission is discontinued, and, in the event of a power failure, the system automatically returns to an unarmed configuration. The tank remains pressurized after the arming valve is closed.

(3) The gas charging valve is a stainless steel device threaded into the system manifold which allows the pressure sphere to be filled with gas while the module is on the ground. A ten-micron filter is incorporated in the charging valve to keep contaminants from entering the system.

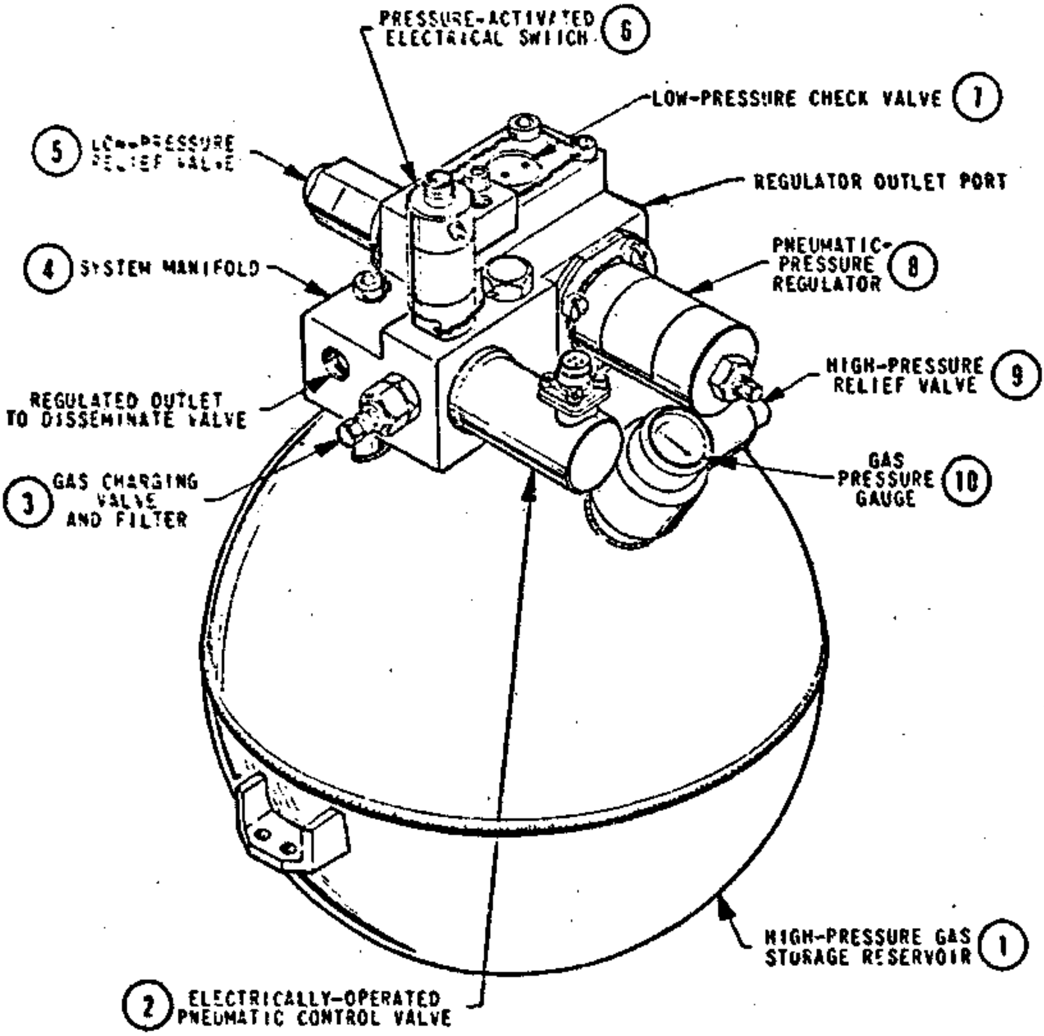

Figure 11. Nitrogen Storage and Control System

(4) Manifolds are attached to the pressure sphere to replace mounting brackets and pneumatic lines. They are machined blocks ported in such a manner as to properly connect the transfer system components attached.

(5) The low-pressure relief valve is necessary to guarantee that the pressure in the agent tank will not exceed 92 psig even if the pressure regulator fails. In the event of regulator failure, the valve will vent the pressurized gas into the atmosphere at a sufficient flow rate to prevent the agent tank from being over-pressurized. When the tank pressure drops to 75 psig, the valve reseats itself.

(6) The pressure-activated electrical switch is located in the manifold between the reservoir and the arming valve. Its pressure sensing components are set to throw an electrical switch from one pole to another when the pressure in the sphere falls below 200 psig. This action interfaces with the system logic in such a manner as to: (a) allow the system to be armed only if the sphere pressure is greater than 200 psig; (b) automatically turn the dissemination valve off when the sphere pressure reaches 200 psig; (c) automatically initiate the next programmed step in the dissemination sequence.

(7) The low-pressure check valves permit fluid or gas flow in one direction only. Their purpose is to prevent the flow of agent back up the pneumatic lines from the agent tank to the rest of the agent transfer system pneumatic components. Two check valves are used to insure that the agent does not back up into the agent transfer system; thus, one check valve could fail without any harmful effects to the system. (The second valve was added after failure of the check valves on the GFE modules.)

(8) The pneumatic pressure regulator is designed to maintain a constant flowing pressure of approximately 55 psig in the agent tank. No-flow pressure is 71 psig.

(9) and (10) The high-pressure relief valve and the gas pressure gage are both mounted on a small manifold which attaches to the pressure sphere to provide a good view of the gas pressure gage. This gage is designed with a color coded scale to simplify the charging procedure and to add to the safety of the system by providing accurate indication of the gas pressure. The high pressure relief valve increases the safety of the system by negating the possibility of over-charging the pressure sphere. This valve opens to allow gas to escape when the reservoir gas pressure reaches 3,400 psig and remains open until the gas pressure in the reservoir has fallen to 3,100 psig. At

3,100 psig the valve reseats itself.

<u>The low-pressure bleed valves</u> located on the forward bulkhead of the module allow the low pressure part of the system to be bled to atmospheric pressure in order to remove the tank fill caps. The valves have been designed and located in such a way that the module nose cone cannot be attached to the module until these valves are closed, thus assuring that the module cannot be flown with the valves open.

3.2.7 <u>Component Testing</u>

Two agent transfer system units (Figure 11) underwent environmental tests to insure the design would meet specifications. These tests are listed in Table III.

During low temperature (-65°F) tests, the solenoid arming valve stuck and leaked, and the low pressure relief valve leaked. These problems were solved by better surface finish on the base of the solenoid valve, changing the O-rings to silicone rubber, and better alignment of the poppet with the base and solenoid. This reduced the amount of pull required to operate the valve. The seat of the relief valve was changed to silicone rubber. After these changes were made, the units were retested and found acceptable.

3.3 <u>DISSEMINATION SYSTEM</u>

The purpose of the dissemination system is to control the start and stop of the agent flow, the flow rate, and to disseminate defoliant agents in such a manner that they reach the ground vegetation in 200-to 400-micron diameter particles, after ejection from high speed aircraft at an altitude of 100 feet.

There are two basic methods of controlling the start and stop of the flow.

- Electromagnetically, or
- Electropneumatically.

An investigation of the power requirements to operate the valve in less than 75 milliseconds indicates that the available electrical power was inadequate to do anything other than perform a control function. Because of the lack of electrical power, the electropneumatic system was chosen so that the

TABLE III. ENVIRONMENTAL TESTS ON THE TRANSFER SYSTEM

TEST	UNIT 1	UNIT 2
System Leak And Performance	X	X
Low Pressure Per MIL-STD-810B, Method 500.1 - Procedure II	X	
High Temperature Per MIL-STD-810B, Method 501.1 - Procedure I	X	
Low Temperature Per MIL-STD-810B, Method 502.1 - Procedure I	X	
Temperature Shock Per MIL-STD-810B, Method 503.1 - Procedure I	X	
Temperature-Altitude Per MIL-STD-810B, Method 504.1 - Procedure I	X	
Humidity Per MIL-STD-810B, Method 507.1 - Procedure I		X
Fungus Per MIL-STD-810B, Method 508.1 - Procedure I		X
Salt Fog Per MIL-STD-810B, Method 509.1 - Procedure I		X
Sand And Dust Per MIL-STD-810B, Method 510.1 - Procedure I		X
Explosive Atmosphere Per MIL-STD-810B, Method 511.1 - Procedure I		X
Acceleration Per MIL-STD-810B, Method 513.1 - Procedure I	X	
Vibration Per MIL-STD-810B, Method 514.1 - Procedure I, Equipment Class I Mounting A, Figure 514.1, Curve D	X	
Acoustical Noise Per MIL-STD-810B, Method 515 - Procedure I	X	
System Acceptance (System Leak And Performance)	X	X

compressed gas within the module could perform the power operations.

To accomplish the desired function of dissemination, the following items are required:

- Dissemination pilot valve (solenoid valve).
- Dissemination valve pneumatic actuator.
- Dissemination valve.
- Nozzle.

All components are attached to the aft bulkhead of the module to reduce the opening time of the dissemination valve. (The pilot valve, the pneumatic actuator and the dissemination valve comprise one modular assembly.)

The first two components are required to operate the dissemination valve through a signal from the cockpit of the aircraft. They are inclosed in a stainless steel housing attached to the top of the valve. Each of these components has been designed to withstand agent contamination, both structurally and functionally. When the pilot gives the arm command to the module, regulated 60 psig gas is introduced into the inlet port of the pilot valve. When the dissemination signal activates the pilot valve solenoid, the regulated gas is allowed to enter the pneumatic actuator piston cylinder. The gas pressure drives the piston to the other end of its cylinder. This opens the dissemination ball valve through a rack and pinion gear. When the solenoid pilot valve is deactivated, the air from the actuator piston is bled off and the piston is spring returned. This closes the ball valve. This type of valve assembly was selected because it offers the highest reliability, smallest size, lightest weight, lowest pressure drop through the valve, and the lowest cost due to its design. The valve will open completely within 75 milliseconds of the pilot's command.

To develop a nozzle, a series of static and flight tests (Section X) was conducted. The results of these developmental tests indicated that:

- The orifice size had small effect on the size of the particles ultimately striking the ground.
- The relative velocity of air striking the ejected particles had a major effect on their size.

- The primary effect of varying agent flow rate on droplet size was due to the resulting changes in slip stream particle relative velocity and not to internal turbulence.

Nozzle design evolved in the following manner: To generate data, a nozzle was designed, fabricated and tested. This first nozzle (Test Nozzle No. 1, Figure 12) was designed so that agent flow rate, orifice size, and agent shear direction could be varied. Using Test Nozzle No. 1 and the GFE nozzle, (Figure 13) static and flight tests were conducted. As a result of these tests, more simplified test nozzles were designed to further study nozzle configurations under dynamic conditions.

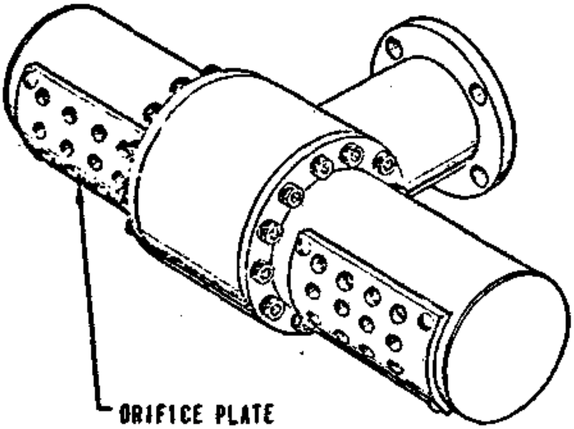

Figure 12. Test Nozzle No. 1

Test Nozzle No. 2 used one- and two-orifice plates with deflectors (Figure 14). Test Nozzle No. 3 (Figure 15) used conical nozzles with different size restricting orifices up-stream from the exit nozzle to regulate flow. From aircraft flight tests with these nozzles, it was determined that a variable size orifice could be used to get the proper droplet size as well as to control the flow rate.

Prototype Nozzle No. 1 (Figure 16) using an elastic diaphragm backed up with metal stiffeners bonded on the diaphragm was then fabricated. This first prototype was used in static tests to demonstrate the design.

Prototype Nozzle No. 2 (Figure 17) consisted of a stainless steel housing with a molded diaphragm and with stiffeners molded into the diaphragm. When the nozzle underwent static tests, the molded stiffeners prevented the elastic diaphragm from stretching, causing it to tear. A flat free-floating stiffener was designed to overcome the tearing problem. Prototype No. 3 (Figure 18) underwent successful static cycling and flight testing. After these tests, the nozzle housing was redesigned for weight reduction and to simplify fabrication and production. Polypropylene was selected to mold the nozzle

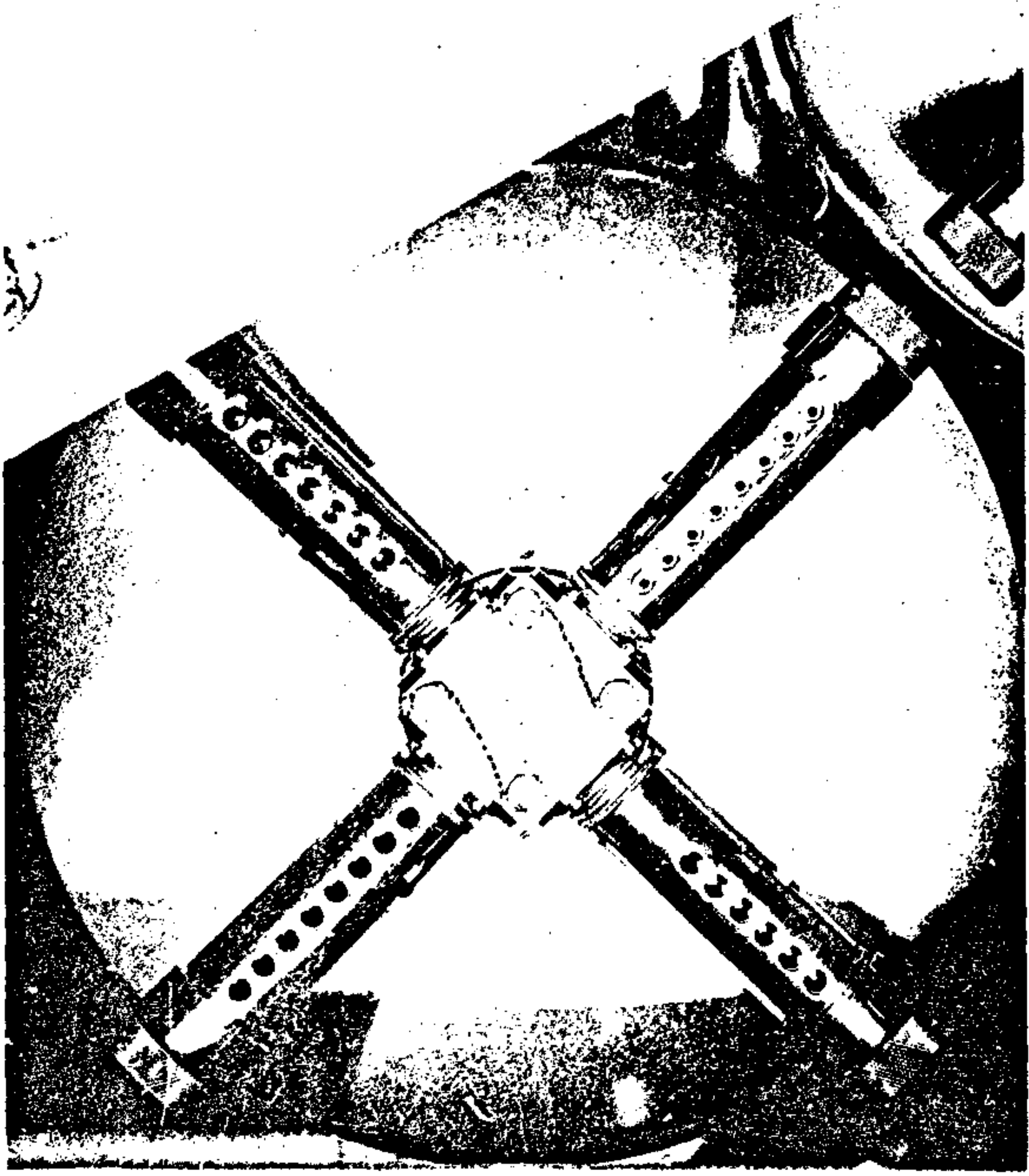

Figure 13. GFE Nozzle

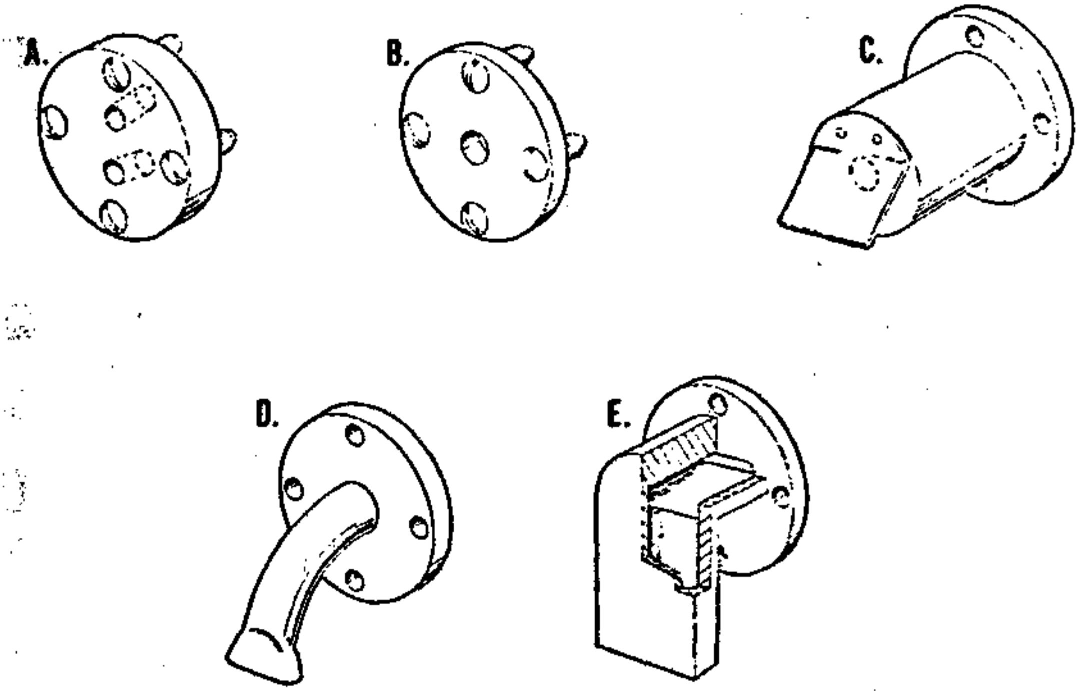

Figure 14. Test Nozzle No. 2

sleeve and body because, in addition to being easy to mold, it is also resistant to the agents used.

The nozzle allows the agent to pass through the circular orifice, which can be varied from 3/8-inch diameter to 1-1/4-inch diameter by rotating the adjustment sleeve surrounding the orifice. The body of molded polypropylene connects the nozzle orifice to the dissemination valve, functions as an agent accumulator in order to reduce fluid turbulence, and supports the nozzle orifice diaphragm, adjustment sleeve, and tail cone. The adjustment sleeve, also of molded polypropylene, controls the orifice size and protects the nozzle diaphragm from damage during loading and storage. The nozzle diaphragm (molded fluorosilicone rubber with a 3/8-inch diameter orifice in its center) is molded to a threaded stainless steel insert. Ten flat stainless steel inserts are held to the orifice by retainers molded in the rubber. They run radially from the orifice to the outer perimeter of the diaphragm. When the dissemination valve is opened, agent flows into the nozzle, fills it, and pressurizes the inside face of the nozzle diaphragm. The diaphragm deforms under the pressure with an out-

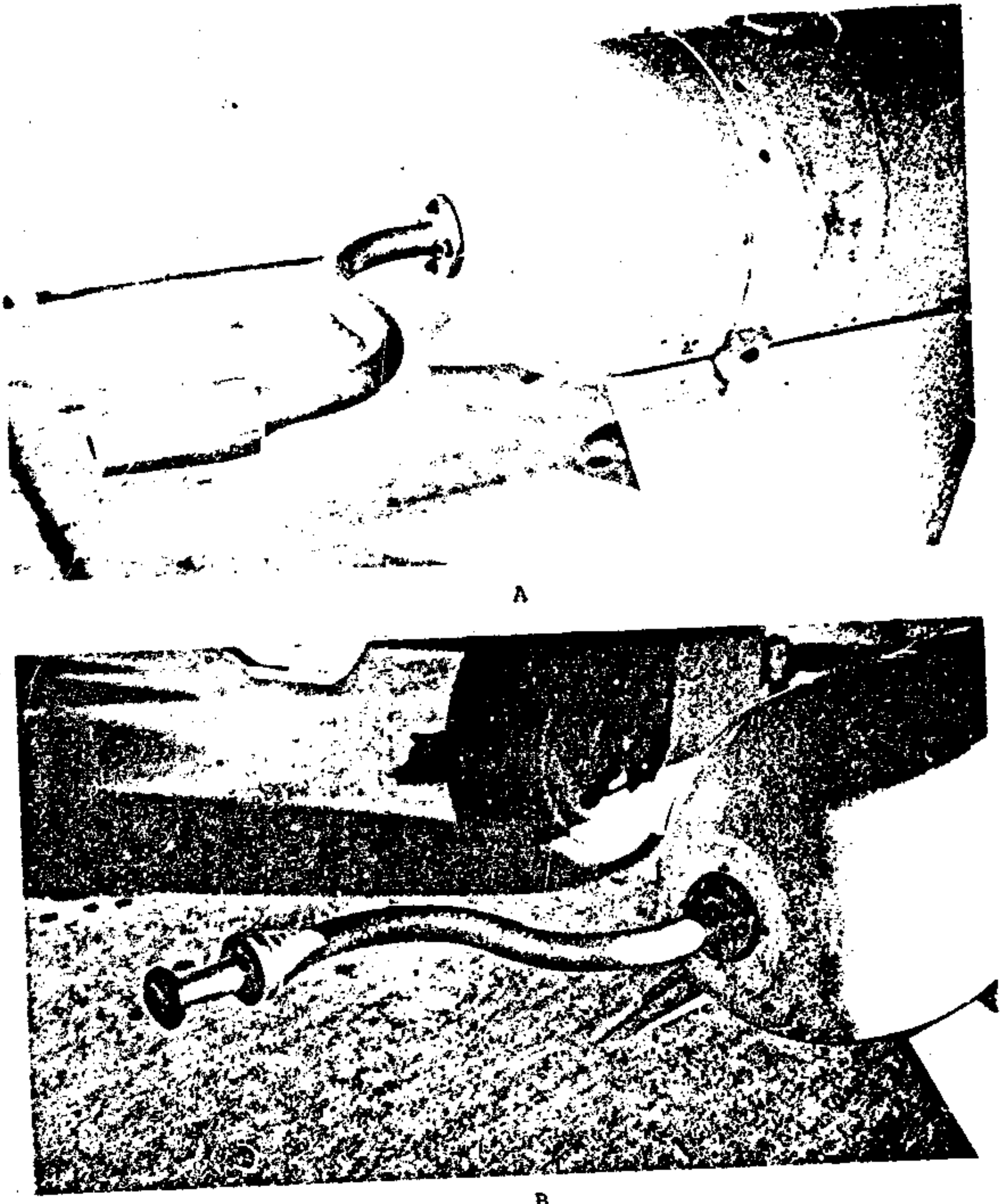

Figure 15. Test Nozzle No. 3

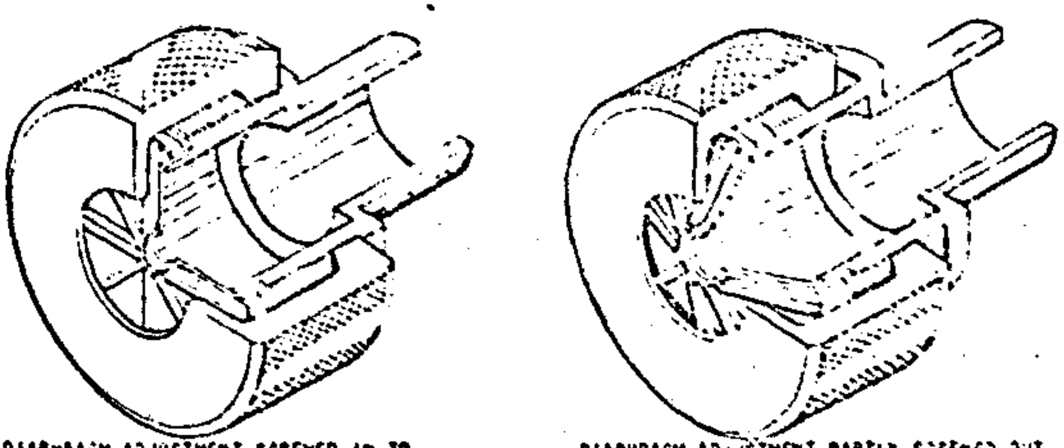

DIAPHRAGM ADJUSTMENT SCREWED IN TO
MAINTAIN MINIMUM DIAPHRAGM
EXPANSION AND, THUS,
MAXIMUM EJECTION VELOCITY.

DIAPHRAGM ADJUSTMENT PARTLY SCREWED OUT.
THIS ALLOWS DIAPHRAGM TO EXPAND OUTWARD,
INCREASING ORIFICE SIZE, DECREASING
EJECTION VELOCITY AND STREAMLINING FLOW.

Figure 16. Prototype Nozzle No. 1

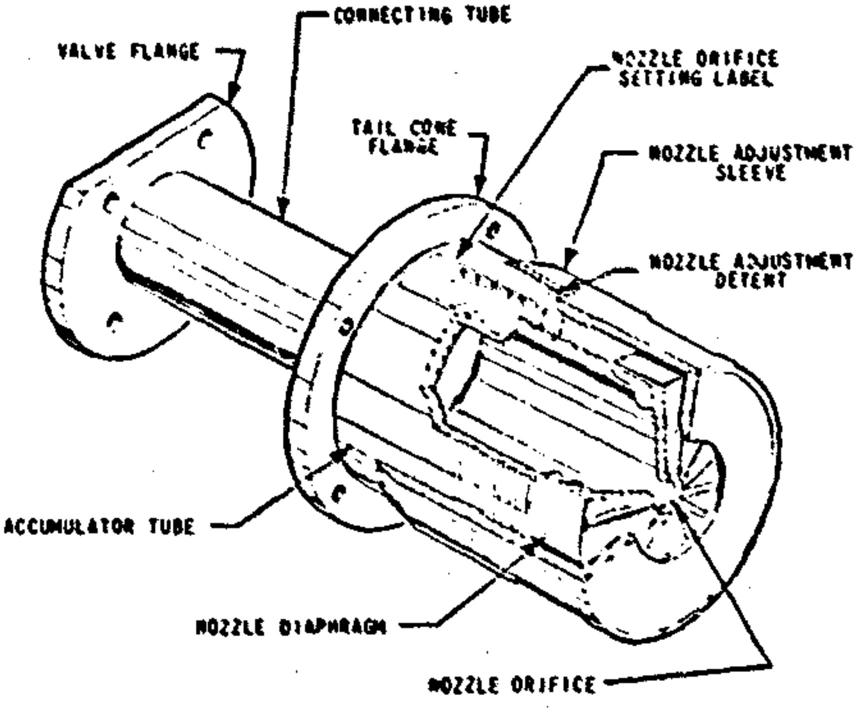

Figure 17. Prototype Nozzle No. 2

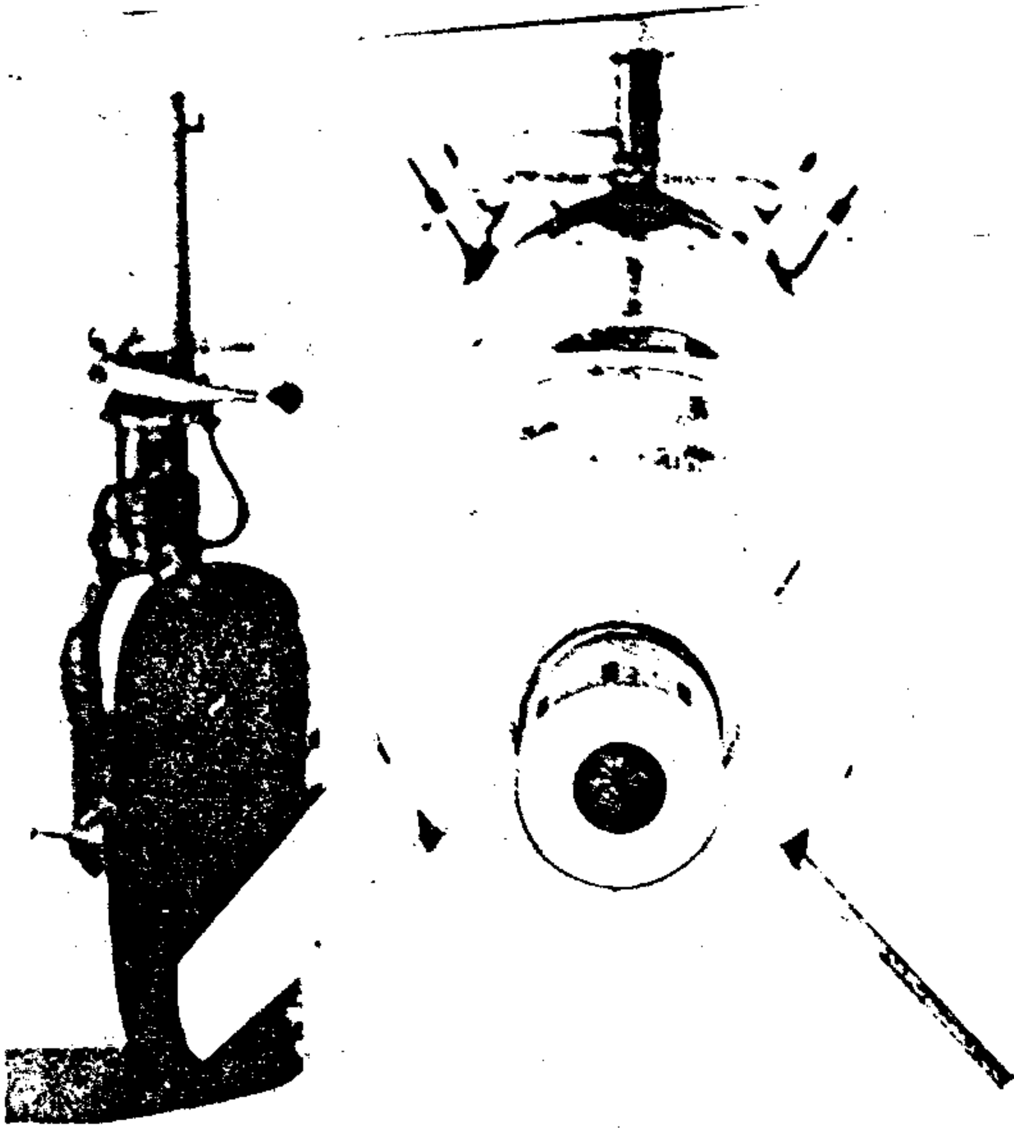

Figure 18. Prototype Nozzle No. 3

ward bulge which enlarges the orifice. Ordinarily, the diaphragm would tend to form a hyperboloid when pressurized; however, the flat inserts cause it to form a cone. This allows the orifice diameter to be precisely controlled by the adjustment sleeve, which has a hole in it larger than the largest orifice diameter desired, but smaller than the diaphragm's outer diameter. This annular end cap is prepositioned to the desired distances outside the diaphragm by screwing the adjustment sleeve in or out (Figure 19). Thus, when the pressurized agent deforms the diaphragm, the adjustment sleeve end cap determines the central angle of the cone formed and, consequently, the orifice diameter. The nozzle orifice diameter adjustment is easily made external to the module. The tail cone need not be removed to reach the adjustment sleeve.

3.4 ELECTRICAL CONTROL CIRCUITRY

The system is operated and controlled electrically from the aircraft. The two circuits available to operate the system are:

(1) the arming circuit and (2) the fire circuit, pickle circuit, or dissemination circuit (in the PAU-8/A it will be referred to as the dissemination circuit).

The system must be capable of being armed and disseminated through electrical commands from the pilot. The electrical controls interface with the pneumatic system through the arming solenoid, dissemination solenoid, and pressure switch. The system must also be capable of several different configurations of sequential dissemination. To provide these configurations, a pressure switch and a mode selector switch are required. To provide safety, an arming switch (safety switch) and an arming relay are required.

The system operates on 28 VDC with a current drain of 1.06 amps per module when armed and disseminating. The power breakdown is as follows:

Dissemination Solenoid	0.5 amps
Arming Solenoid	0.5 amps
Arming Relay Coil	0.06 amps

If all four modules are disseminating simultaneously, the total current drain is 4.24 amps. The longest drain with all four modules disseminating at once is approximately two minutes (25 gal/min for 50 gallons). Therefore, the largest drain on the aircraft power would be 0.141 ampere-hours per four-module configuration. The 4.24 amps per four-module configuration is

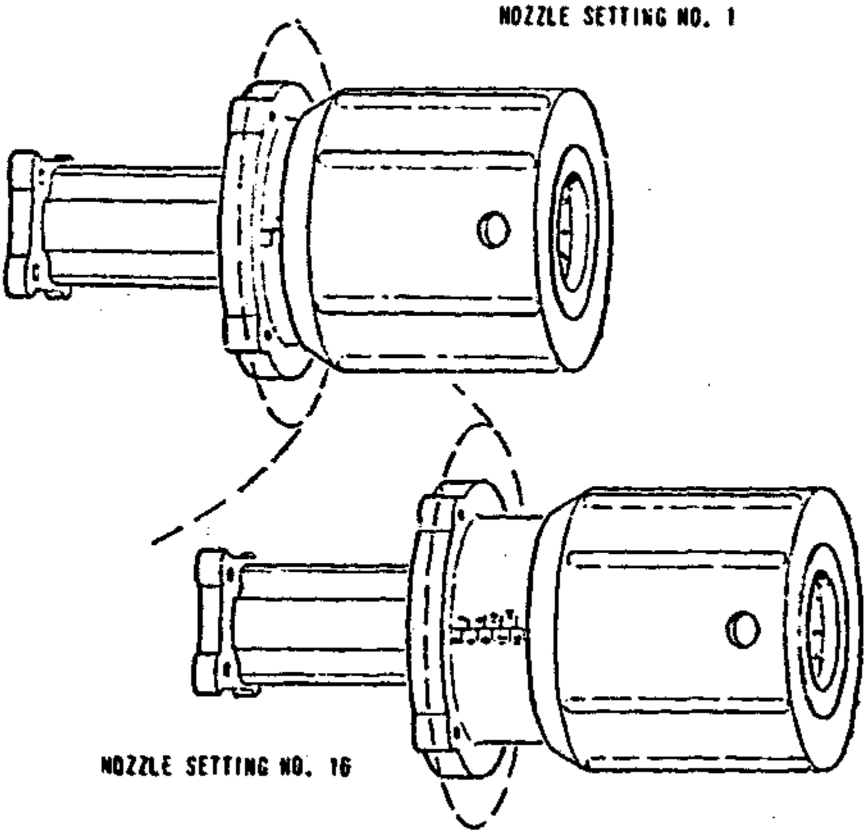

Figure 19. Production Nozzle

below the 5 amps maximum allowable on some aircraft stations.

A mode selector switch is mounted on each junction box. However, when more than one module is used, only the mode switch in Module No. 1 is operable; the other mode switches have no controlling function. Mode position No. 1 disseminates modules sequentially; top, left, right, then bottom. Mode position No. 2 disseminates modules top and right simultaneously, then left and bottom simultaneously. Mode position No. 3 disseminates modules top, right and left simultaneously, then bottom. Mode position No. 4 disseminates all modules simultaneously. Table II shows other modes of operation for the two- and three-module configurations.

The electrical system operates in the following manner: When the red-flagged arming pin (REMOVE BEFORE FLIGHT) is removed, it allows the two poles on the arming switch to close. One pole permits arming, the other dissemination. Actuation of the arming switch by the pilot provides 28 VDC power through the arming switch (safety switch) and the pressure switch to the arming solenoid, which operates the arming valve. It also energizes the arming relay coil. Activating the arming relay coil closes a set of contacts, making dissemination possible. Before the circuit can be armed, the pressure switch must be in the high position which only occurs when the pressure in the high-pressure gas container is greater than 200 psi. When the pilot depresses the dissemination button, 28 VDC is supplied to the dissemination solenoid through the arming switch and the arming relav contacts. When the tank is fully disseminated (pressure below 200 psi), the pressure switch supplies power to the next module for dissemination. The pilot may start and stop dissemination by releasing and depressing the pickle button.

Three plugs are located on the junction box. One connects the module to the circuit, another connects other modules together electrically, and the last is a test plug. Also mounted in the junction box are two zener diodes. These diodes allow parallel operation of the arming valve and relay at normal operating voltage of 28 VDC, but will isolate these components for continuity testing at 6 VDC.

3.5 CENTER SECTION (AGENT TANK)

The center section (Figure 20), basically a 13-inch OD tube connecting the fore and aft bulkheads, provides the following major functions:

- Attaches to the bomb racks
- Is the major strength component
- Contains the agent
- Contains two fill ports
- Attaches to the module adapter
- Accepts up to four stabilizing fins
- Provides mounting for all other hardware (pneumatic system, disseminate mechanism, etc.)

Paragraph 3.5.1 gives the design philosophy for each subcomponent in the center section and paragraph 3.5.2 summarizes

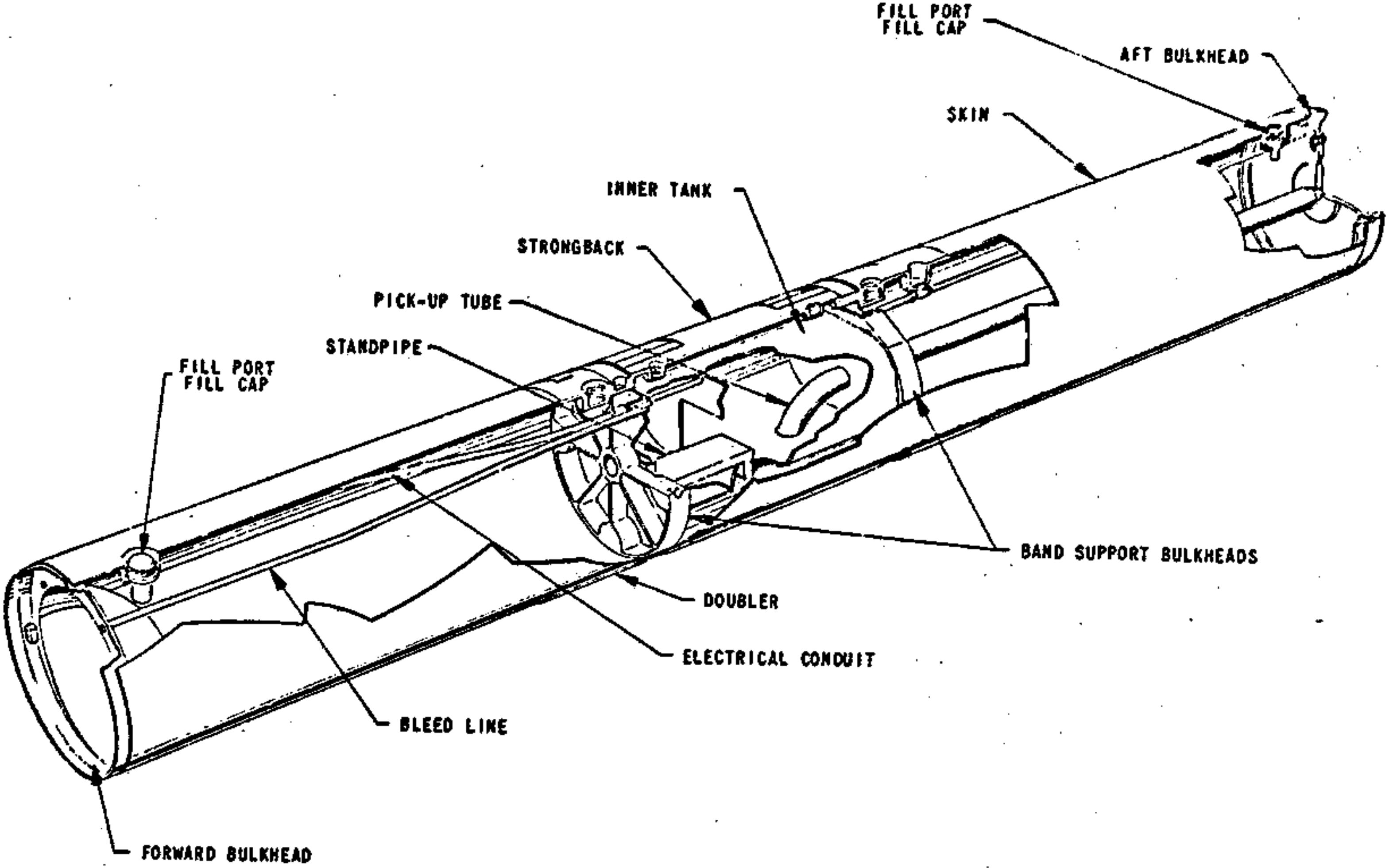

Figure 20. Tank Assembly (Agent Tank)

the flow tests which were conducted to optimize agent flow dynamics within the center section of the module. Section IX discusses the fit tests and wind tunnel tests which also influenced the design.

3.5.1 Component Parts

The center section (agent tank assembly) consists of the following major components (Figure 20):

- Strongback (forged)
- Skin (13-inch OD tube) (rolled sheet)
- Forward bulkhead (drawn sheet)
- Aft bulkhead (cast)
- Bank support bulkheads (cast)
- Inner tank (formed sheet)
- Fill ports and caps (wrought aluminum; Nylon 6/6, 40 percent glass; stainless steel)
- Pick-up tube (formed aluminum tubing)
- Stainless steel pipe
- Electrical conduit

The design philosophy for each of these components is explained in the following paragraphs.

All components except parts of the fill ports and caps are made from aluminum to keep hardware weight down commensurate with strength requirements. Alloy 5083 is used exclusively for all forged and wrought components; 5083 provides an excellent combination of strength, impact and fatigue resistance, weldability, and resistance to corrosion and stress cracking. Cast components (aft bulkhead, bank support bulkheads) are made from either 356 or 357 aluminum casting alloy to provide high strength and light weight.

3.5.1.1 Strongback

The module strongback incorporates both 14-inch and 30-inch lugs, has an electrical cavity aft of the rear 30-inch lug (to accept pylon umbilical cord), and provides bearing area for the sway brace pads of the following bomb racks:

- MK51
- F-100/Type I
- F-100/Type III
- MAU-9/A and MAU-9A/A
- MAU-12B/A
- F-105/Multi-Weapon Adapter
- F-105/Universal B/D Pylon

The hardware delivered is compatible with these racks. The sway brace pads were not made compatible with MIL-STD-8591C until after design approval; therefore, the hardware is compatible with the racks only. The strongback is also able to withstand the high-lug and sway-brace forces which are generated with the system in the four-module configuration.

The strongback could have been either forged, cast, or rolled and machined from thick plate; however, rolling and machining is costly for any production quantity. While both casting and forging provide excellent design flexibility, forging produces a more integral part which requires considerably less inspection and, therefore, reduces cost. Because of this, forging was the fabrication method selected.

Threads are cut directly in the strongback to mount the 14-inch and 30-inch lugs. Rigorous testing showed that this method of lug mounting provided excessive strength while keeping costs and weight at a minimum. Separate external high-strength steel pads are bolted to recesses in the strongback to provide adequate sway-brace pad-bearing resistance and to alter the basic 13-inch OD store configuration to allow mounting of the store to the seven specified bomb racks.

3.5.1.2 Skin

The skin is a 13-inch OD tube which mates with the strongback and circumscribes the fore, aft and band-support bulkheads.

It must withstand 55 psig internal operating pressure and all imposed environmental loadings during handling and flight. The skin is made from rolled and welded 5083-H323 aluminum, 1/8-inch thick. Rolling and welding was selected because it is a far less expensive method of forming a tube with irregular cutouts.

3.5.1.3 Bottom Doubler

The bottom doubler strengthens the underside of the store, providing a cradling area for handling. MIL-STD-8591C dictates doubler size and strength. The doubler is adequate to support a single module on forklifts, but the loading and handling fixture must be used for the two-, three-, or four-module configuration. The doubler is made from simple rolled rectangular plates, fillet-welded to the module skin. Three plates are used to provide locating recesses for the mating adapter bands.

3.5.1.4 Forward Bulkhead

The forward bulkhead closes the front end of the center section and provides mounting support for the pressure sphere and all pneumatic hardware, electrical tubes, bleed tubes and nose cone. The bulkhead can either be cast, forged, machined from stock, or drawn from sheet. Casting and forging provide excellent high-strength components; however, both require secondary machining operations and the resulting parts are too heavy. Machining from stock is excessively costly for large components such as the forward bulkhead. Drawing the front bulkhead from sheet aluminum provides an inexpensive part (requires little machining) which will meet all strength requirements.

3.5.1.5 Aft Bulkhead

The aft bulkhead closes the rear of the center section and provides support for the fins, aft fairing, dissemination valve and electrical tube, and incorporates a pressure gage port (for checking tank pressure), and drain plug. Because of the high fin loading, a bulkhead drawn from sheet aluminum cannot be used. Forging and casting are the major alternatives, both of which require many machine operations. Forging requires more costly tooling for small quantities and long lead time on the first order, but provides a part which requires little inspection. Casting provides a part with less strength but since it is adequate for the aft bulkhead and less expensive than forging, the aft bulkhead was cast from 357 aluminum.

3.5.1.6 Band-Support Bulkheads

The band-support bulkheads are located inside the center section skin directly under the mating adapter band straps. The bulkheads are fillet-welded to the strongback, the assembly fitted inside the skin, and the bulkheads plug-welded to the skin. The band-support bulkheads must be able to withstand the band and mating adapter loads. These bulkheads also form the ends as well as house the drain plug for the inner tank. Casting was selected as providing the least expensive, most applicable fabrication process because of the thin dip webs and complicated shape.

3.5.1.7 Inner Tank

The inner tank is essentially an elliptical tube welded between the band-support bulkheads. This inner tank provides a settling chamber and is used to optimize agent flow dynamics. Agent is transferred to the inner tank from between the band-support bulkheads of the main tank, picked up (pick-up tube) inside the inner tank, and fed to the disseminating mechanism at the aft end of the store. Aluminum sheet (5083) is formed and welded to form the tank. The transfer tube and the pick-up tube are formed from standard tubing and welded in place.

3.5.1.8 Pick-up Tube

The pick-up tube passes through the center of the module and runs from the inner tank to the aft bulkhead. This tube carries the agent from the inner tank to the dissemination valve at the aft bulkhead. The tube is welded to the aft band-support bulkhead and to the aft bulkhead. This tube is made from aluminum tubing bent at one end and swaged at the other. The tube was swaged to match the inside diameter of the dissemination valve.

3.5.1.9 Standpipe

The standpipe, made from rectangular aluminum tubing, and welded to the bottom of the inner tank, carries the agent from the main tank to the inner tank.

3.5.1.10 Electrical Conduit

The electrical conduit is a small aluminum tube which passes from the front bulkhead to the umbilical in the strongback to the aft bulkhead. This tube is used to run the electrical control wires and pneumatic lines.

3.5.1.11 Fill Ports and Caps

Fill ports are recessed into the skin near the fore and aft bulkheads to accept the filler caps and nipples (Figure 21). The nipples are of the flange type, utilizing a port-type seal (o-ring) and are made entirely from Nylon 6/6, 40 percent glass-filled. This nylon is compatible with the various agents and enables the nipples to be injection molded for low production costs. The quantity produced under this contract did not warrant the cost of tooling to have them injection molded and were, therefore, machined from extrusions. Screens are incorporated in the nipples to limit the size of foreign matter which may enter the module. The screens can be removed from the nipples by simply removing a snap ring.

The cap is a ball-lok type with a pressure locking device, preventing cap unlocking when internal tank pressure is over five psig. The cap is a custom design and uses Nylon 6/6, (40 percent glass) for most components. Where required, 300 series stainless steel is used (ball bearings, etc.). The nylon caps and nipples are much lighter than metal caps and nipples. Color coding on the cap indicates when the cap is locked or unlocked and a note on the cap explains the color coding.

3.5.2 Coating Material

The severe corrosion of aluminum requires that it be protected (through coating) from contact with the herbicide agents, particularly agent Blue. Coatings must also withstand the flexing of the dispenser under operational conditions. Those possessing physical properties which permit elongation in excess of 100 percent are able to withstand the flexing. The more brittle coatings, such as the phenolics, crack under these conditions, and, while polyurethane possesses suitable physical properties, agent Orange causes polyurethane material to swell. Silicone coatings exhibit excellent physical properties and the herbicides do not cause the fluorosilicone dispersion coatings to swell. Several fluorosilicone dispersion coating materials were considered but none had all of the

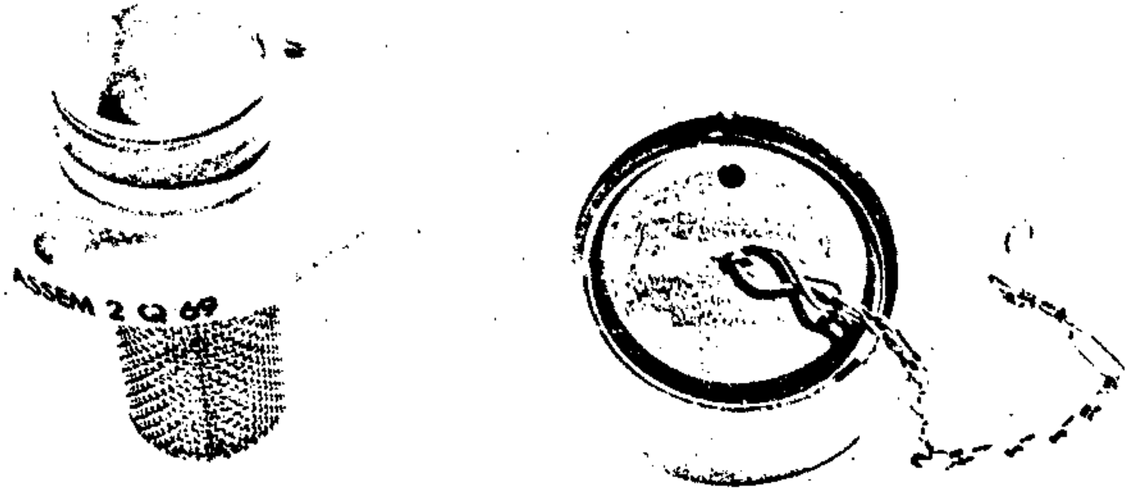

Figure 21. Nylon Cap and Nipple

properties desired. Most of the materials had the desired physical properties but were not suitable for coating the inside of the tank since they required the use of a primer which must be applied in a thin even coat. This could not be done on the inside of the closed tank.

Dow Corning Corporation developed a fluorosilicone in conjunction with agent material compatability studies conducted during this program. To insure proper coating, a 13-inch diameter by 10-inch long module section with bulkheads was made with removable ends. This section was coated with the fluorosilicone material and inspected to determine methods of applying the material. From these coating tests, it was determined that rotation about two axis would be required to get a complete coating of the inside of the module.

3.5.3 Agent Flow

During the first part of the program, ground flow tests were conducted with the GFE TMU-66/A modules. These tests revealed that the pick-up tube system began to suck air around three-fifths empty when the tank was continuously discharged at flow rates of 150 gpm. The cause could not be determined from the modules and, to further study this phenomena, a full-size plastic flow model was built (Figure 22) around the design of the GFE. This design used a tube near the aft end to pick up the agent and pipe it to the dissemination mechanism. A bulkhead with flapper plate, slightly forward of the pick-up tube (Figure 23) was employed to keep the agent near the pick-up tube (for a short time) during aircraft deceleration or a nose-down condition. Although the flapper plate performed its intended function, it also caused the system to exhaust its air supply through the pick-up tube while considerable agent was still in the store. This is characteristic of a flapper plate since a differential fluid head across the plate is required to cause agent flow through the plate opening (equal air pressure exists on both sides of the plate). When the aft (or lower) fluid level drops near the pick-up tube opening, air at 55 psig flows freely out the pick-up tube, exhausting the internal air supply with substantial agent remaining in the store. Figure 22 shows this differential head in the flow model at a flow rate of approximately 90 gpm. The differential head at 150 gpm is approximately twice that shown. One additional drawback to the flapper plate design is that it employs a moving component, and the highly corrosive nature of the agents would cause sticking of the flapper after short periods of use.

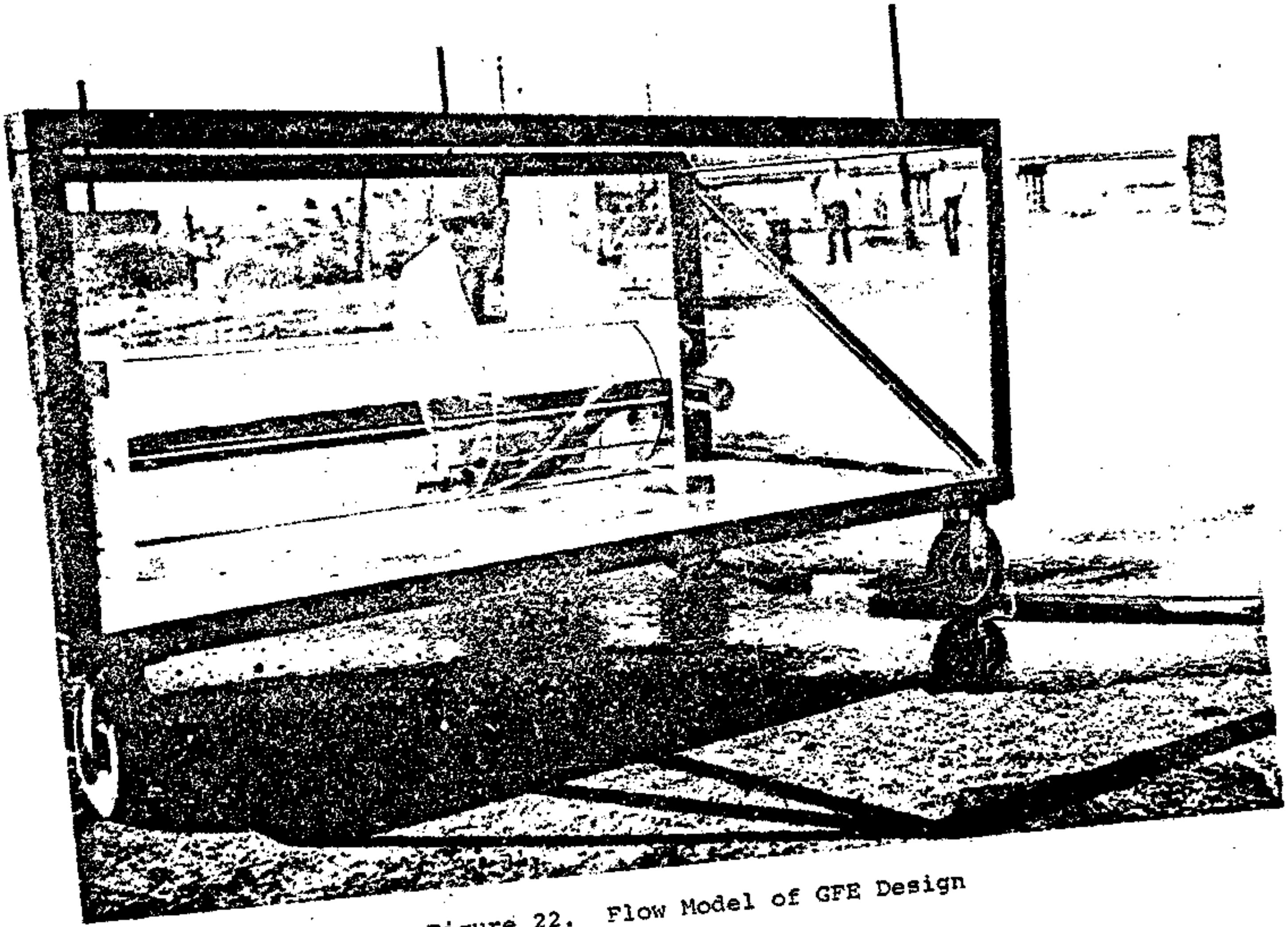

Figure 22. Flow Model of GFE Design

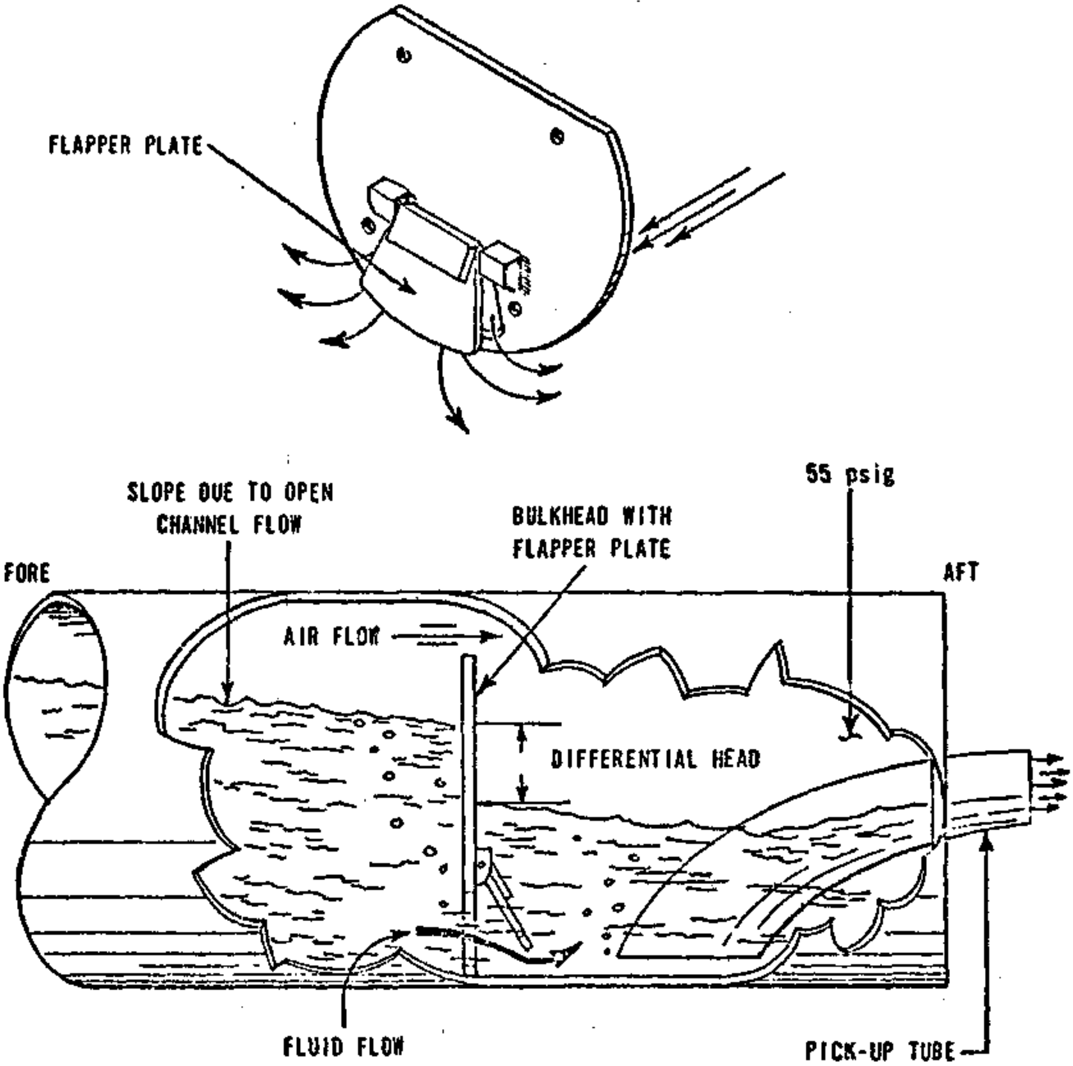

Figure 23. Module With Flapper Plate

The first alternate system investigated employed a sealed bulkhead and used a standpipe type transfer tube as shown in Figures 24 and 25. The standpipe design works on the principle that any agent (or air) which passes through the pick-up tube must first pass through the standpipe. Thus, the aft chamber (around the pick-up tube) remains full until the fore chamber is nearly empty. In addition, as the aft chamber drains, the standpipe continues to scavenge the forward section of the module, almost draining it of agent. To allow complete filling, both the fore and aft chambers must be vented during the filling operation. Figure 25 shows the aft chamber full while the fore chamber is only about half full.

The major problem encountered with the standpipe bulkhead concept was cg shift. Testing indicated that approximately seven gallons capacity in the aft chamber would be required. This will cause a cg shift of about 15 inches when the aft chamber is full and the fore chamber empty. Since only a ±3-inch cg shift can be tolerated (MIL-STD-8591C), further design improvements were investigated.

A seven-gallon separate chamber was designed to fit between the band support bulkheads. This general design was used for extensive testing before the final design (Figure 26 and 27) was arrived at. The first standpipe used was round, which allowed the formation of vortices and passed excessive air into the settling chamber. The rectangular tube standpipe eliminated the vortices .

Another problem which occurred in the settling chamber was turbulence, which mixed the air in the settling chamber with the fluid and then forced the mixture out the pick-up tube. To reduce the turbulence in the area of the pick-up tube, the anti-turbulence bulkhead was placed in the settling chamber. This keeps the turbulence in the front of the settling chamber and away from the pick-up tube.

The tests performed on the final flow model incorporating the seven-gallon inner tank showed total fluid left after dissemination is under one pint at all flow rates (25, 75, 150 gpm). Estimated fluid in the entire model when the disseminate valve first passes air is about one quart. The central-tank settling chamber performs well, providing controlled dissemination for about 99.75 percent of the store's agent capacity.

3.6 NOSE CONE

The nose cone acts as a wind screen covering the forward pneumatic devices and mates with the forward bulkhead. It is

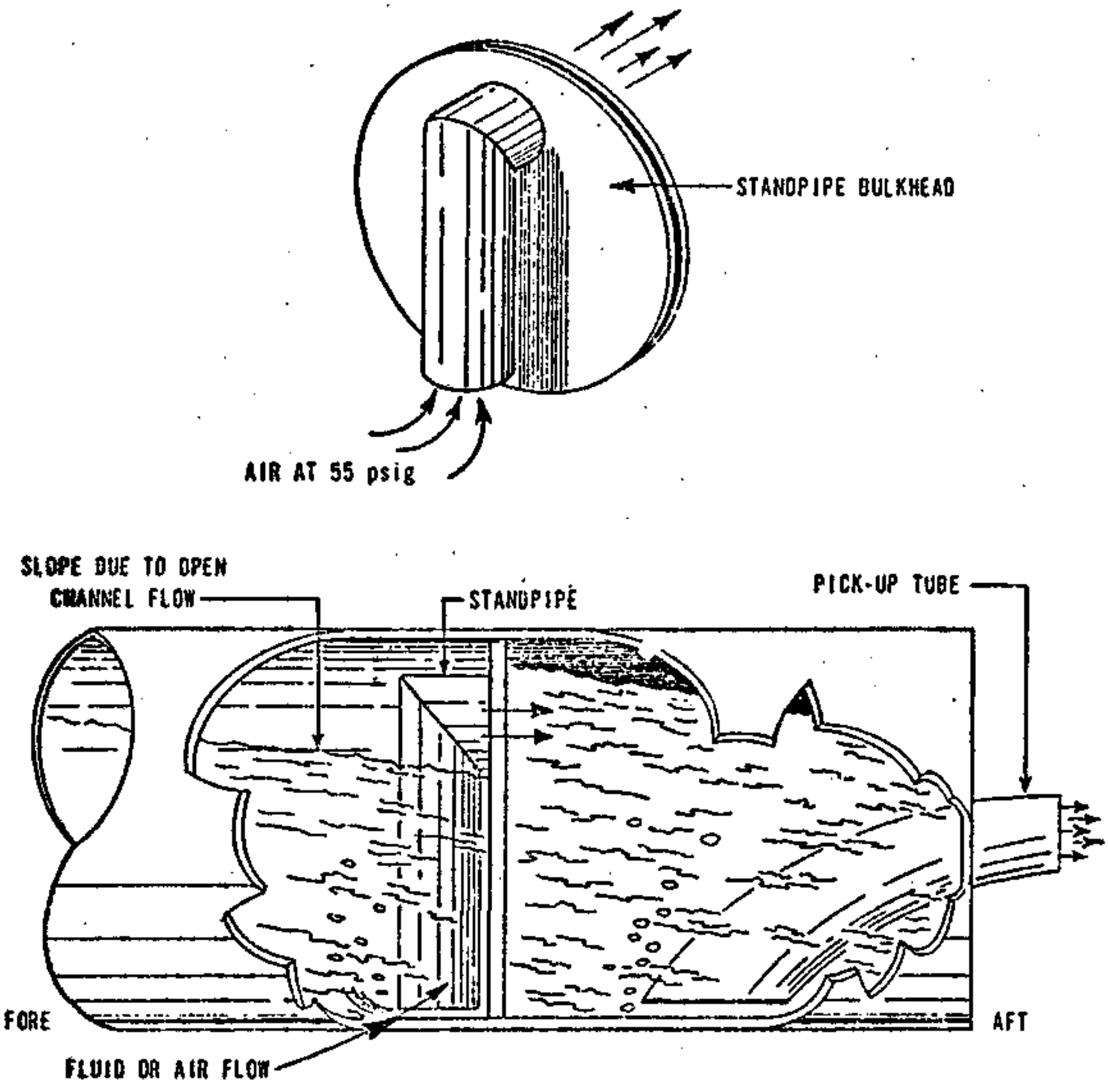

Figure 24. Module With Standpipe Bulkhead

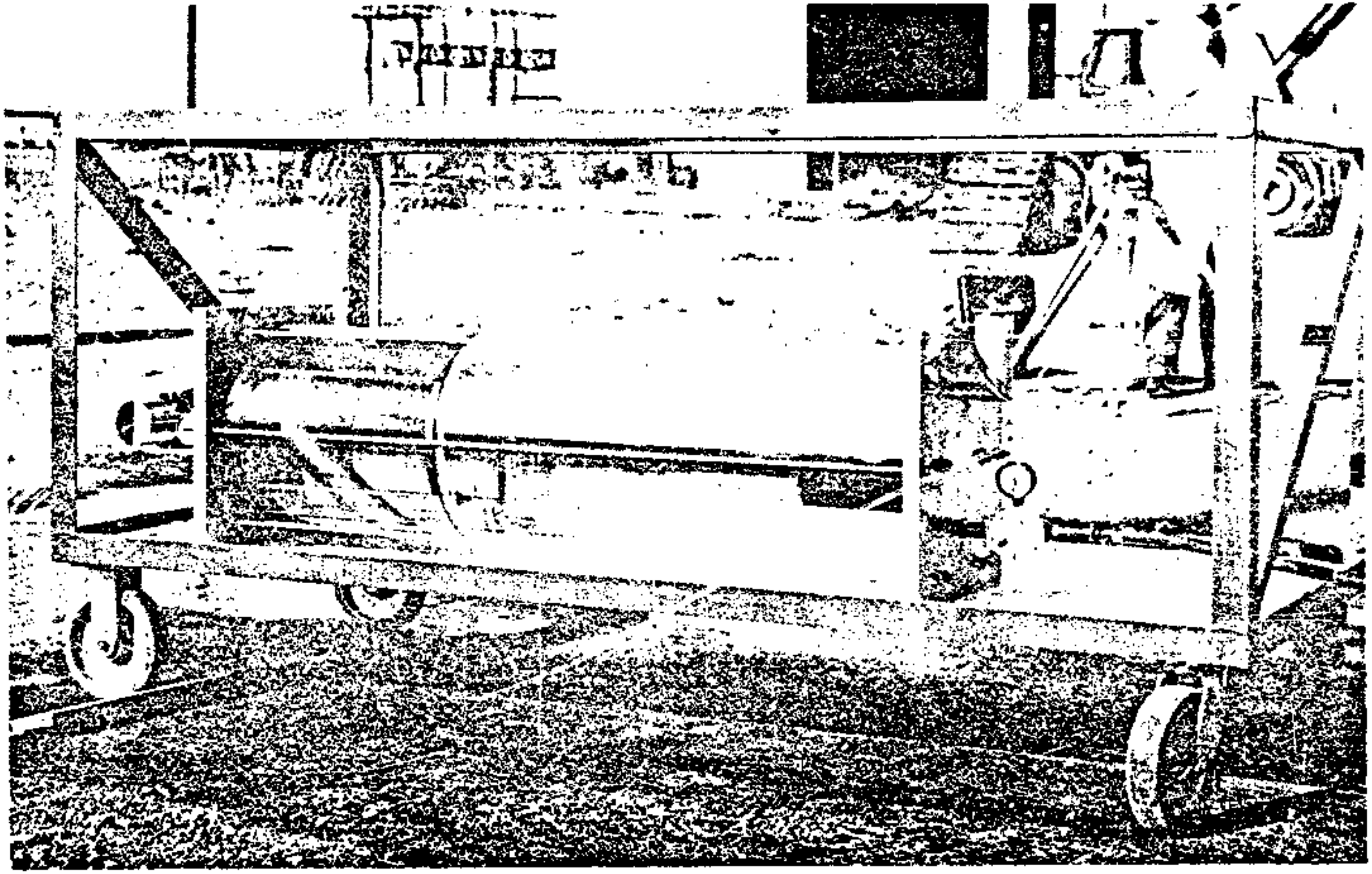

Figure 25. Flow Model With Standpipe Bulkhead

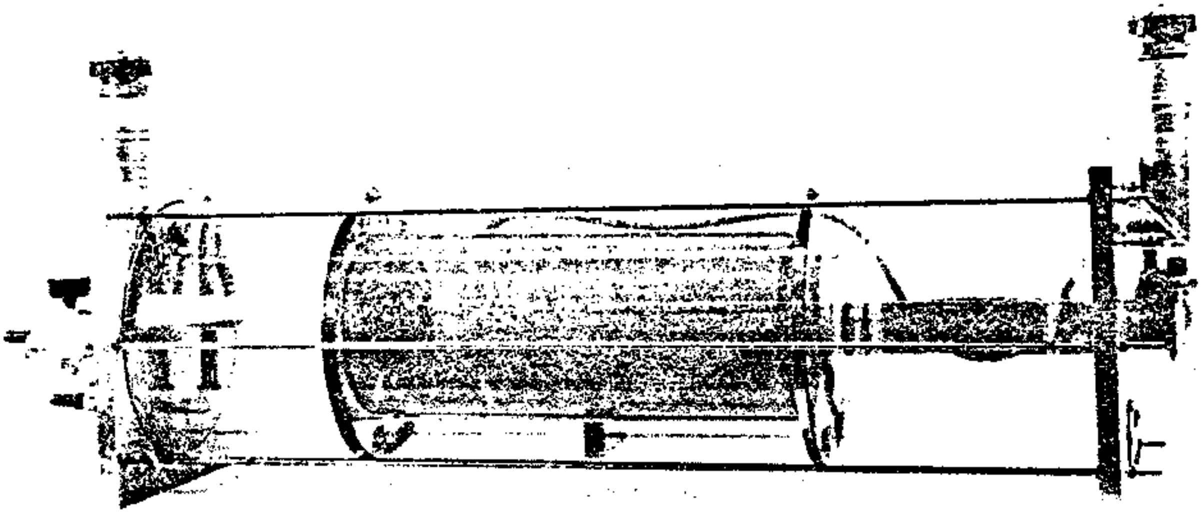

Figure 26. Flow Module With Central Settling Chamber

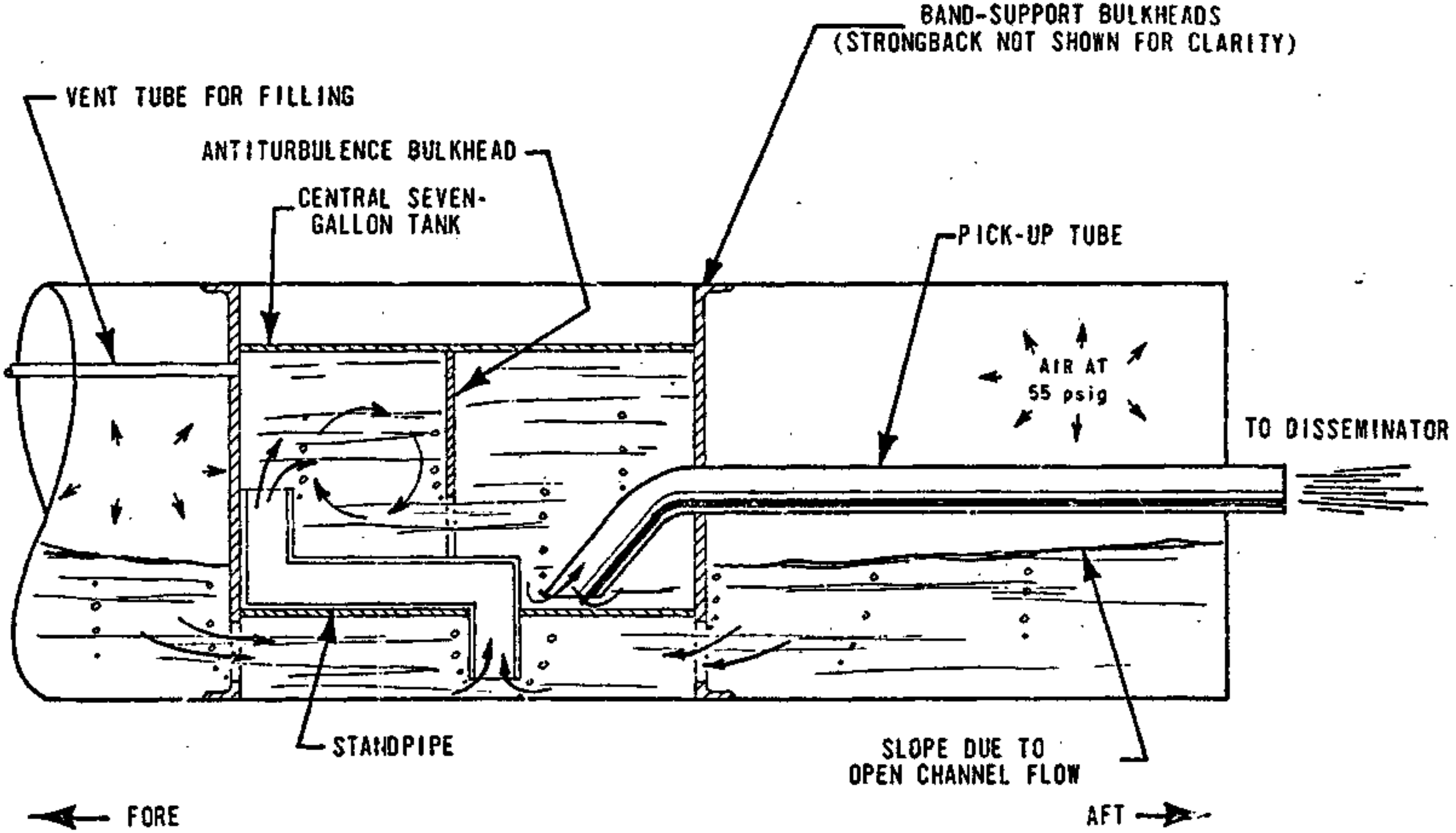

Figure 27. Central Settling Chamber

held in place by a single bolt at the apex of the cone which preloads it against the forward bulkhead/skin assembly. This single bolt technique is used to provide an easy method of removal, since the nose cone will be removed and replaced numerous times during the module life.

The nose cone is spun from 6061-0 aluminum alloy and heat treated to the T6 condition for strength. Metal spinning is the least expensive and most proven method of fairing fabrication for the quantity required by this program and a metal fairing meets all strength and functionability criteria. Other processes such as fiberglass layup, filament winding, etc., are far too expensive for the small weight advantage. A plate is welded to the apex for the nose bolt. A bolt rather than a stud with a nut was used so that there would be no exposed threads which could become damaged.

3.7 TAIL CONE

The tail cone is a hemisphere of spun aluminum used to cover the dissemination valve and nozzle assembly. It is attached to the nozzle assembly by four screws and serves as support for the nozzle assembly. The forward edge of the tail cone engages the aft bulkhead.

3.8 FINS

The purpose of the fins is to provide stability in the event of store jettison. Two fin sizes (a 10-1/2-inch span and a 16-inch span) are required for compatibility with the four different module configurations and all carrier aircraft.

Fin chordwise profile was minimized, commensurate with strength considerations. Aerodynamic characteristics of the stores were determined through wind tunnel tests during a previous program.

Wind tunnel tests and jettison tests (Section IX) on the two-module configuration were conducted during this program to design fins and fin configuration for a stable two-module configuration. The two-module configuration was considered to be unstable under the previous program.

Fit tests (Section IX) on the aircraft involved in this program were conducted to verify the paper study on the clearance of the fins. Numerous manufacturing techniques have been considered for both metal and plastic fins.

- Metal forming and welding (various configurations)
- Die casting and welding (metal)
- Injection molding and ultrasonic welding (plastic)
- Rotational molding - foam filling (plastic)
- Fiberglass layup - foam filled

The type of manufacturing process is obviously dependent upon the type of fin material. Metal fins are strong and can be made with proven techniques but are excessively heavy and costly. Plastic fins are relatively new but offer the following advantages:

- Very low cost
- Extremely lightweight
- Nonconductive and resistant to defoliant agents
- Will readily grind off without sparking if they contact the runway during hard landings.

Because of these advantages, considerable effort was made to develop a plastic fin. Rotational molding was selected as the method of fabrication because of the low cost of tooling and parts for prototype and limited production. In addition, rotational molding produces an integral fin without seams.

Nylon, glass filled nylon, glass filled celcon, and polyethylene were used to fabricate sample parts. The nylon was considered too brittle for handling in case it was dropped on a corner. Glass filled nylon had flow problems in the mold and did not produce satisfactory parts. The glass filled celcon exhibited porosity and low strength because of the porosity. The polyethylene fins filled properly and exhibited strength which was considered adequate for the design loads.

Polyethylene fins were fabricated and delivered to the Air Force for flight testing. The polyethylene fins failed when tested on the F-4 aircraft at 550 knots. Information obtained after the flight test indicated that the design loads were too low because of the irregular flow under the wing stations of the F-4.[a]

---

[a] <u>Davis, Ronald E., Flow Field Characteristics Beneath the F-4C Aircraft at Mach Numbers 0.50 and 0.85</u>, Arnold Engineering Development Center, Arnold Air Force Station, Tennessee, AEDC-TR-70-8, February 1970, Unclassified.

Because of the lack of time to further carry out the development of the low cost plastic fins, the effort was discontinued. A fiberglass-foam filled fin with the same external configuration was designed, fabricated, and tested. Figure 28 shows the load being applied with a foam pad to simulate aerodynamic load. The fiberglass-foam filled fin was about five times as strong as the polyethylene fin.

3.9 MATERIAL SELECTION

The process of material selection for this system was difficult, not only because it must be designed to withstand the action of more than one chemical agent, but also because these agents (Agents Orange, White, and Blue) belong to different chemical families. Since one agent is a mixture of an inorganic salt and an inorganic acid, the materials, particularly the metals, must be selected to resist attack from this acid-salt combination. The plastics and rubbers must not only resist this acid but also the solvent swelling action of the other agents which are organic compounds. Many plastics and rubbers will meet the first of these requirements but will not meet the second. Therefore, it was necessary to test each material for its resistance to all three agents.

3.9.1 Aluminum

The aluminum alloys 5083 and 5086 were considered for use in the PAU-8/A module. The 5086 alloy is less corrosive resistant than the 5083. Both alloys were subjected to the corrosive effects of the three agents at ambient temperature and at 130°F for several weeks. Agents White and Orange have little corrosive effect on aluminum; however, it is heavily attacked by Agent Blue. Agent Blue attacks unprotected 5083 alloy at the rate of one mil per week and 5086 alloy at three mils per week at 130°F. The rate of corrosion at ambient (77°F) is about 10 percent of the rate at the elevated temperature. These results indicate that 5083 alloy should be chosen over 5086 and that it must be protected with a corrosion and solvent resistant coating when exposed to the agents.

3.9.2 Stainless Steels

Grades 304 and 316 stainless steel resisted the corrosive effect of the three agents at ambient temperature and at 130°F for several weeks without visible corrosion. Microscopic examination of the metal surfaces indicated that no corrosion and

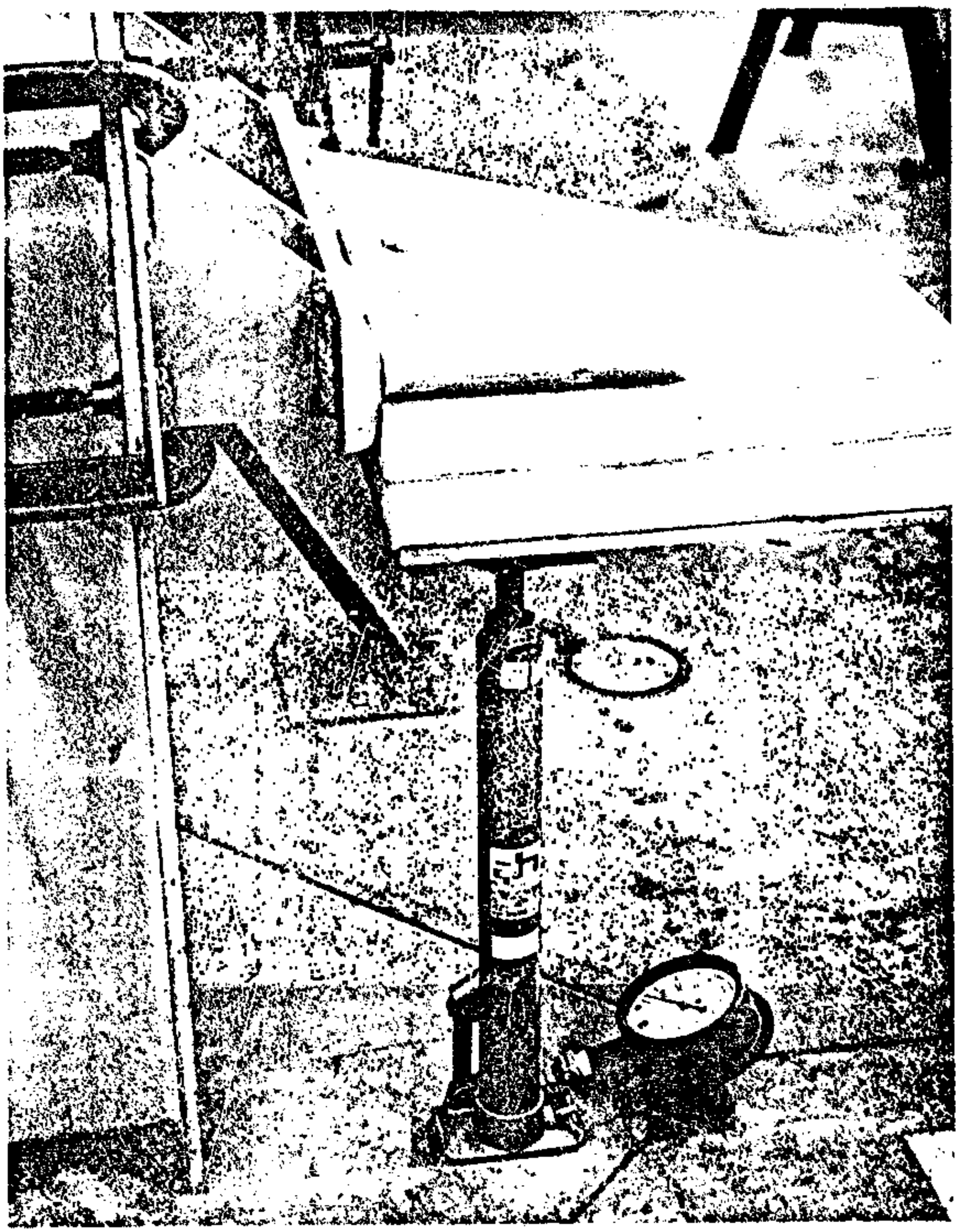

Figure 28. Fin Testing Fixture

very little film formation had occurred. These steels should withstand the corrosive action of the herbicide agents for extended service.

3.9.3 Plastic

Nylon. Nylon resists a wide range of organic and inorganic substances. It is not affected by, nor does it affect, lubricating oils and greases, aliphatic and aromatic hydrocarbons (including the conventional fuels), or the common esters, ketones, ethers and amides. It resists most inorganic reagents, and unlike many metals, it is not affected by electrolytic corrosion. Zytel 38 has the highest acid resistance of the nylon series. Since Nylon 6/6, 40 percent glass filled, resists solvent swelling and acid attack by Agents Orange, White, and Blue, it was selected for use in the construction of the caps for the fill ports. Table IV summarizes solvent retention of the nylon.

TABLE IV. AGENT ABSORPTION OF NYLON 6/6 40 PERCENT GLASS FILLED

AGENT	PERCENT SOLVENT RETENTION
	WEIGHT PERCENT
Deionized Water	0.30
Agent White	0.79
Agent Blue	0.34
Agent Orange	0.25

Polypropylene. Samples of the polypropylene 20 percent glass filled underwent testing in contact with Agents Orange, White, and Blue without any effects of swelling or acid attack by the agents.

3.9.4 Rubber

Gasket and O-ring Selection. Neoprene and Buna rubbers normally used as gasket and O-ring materials are severely swollen by Agent Orange with ultimate loss of the mechanical properties. Fluorocarbon, Viton[1], and ethylene-propylene rubbers were tested for loss of mechanical properties and swelling in the three agents. Tensile sample bars and volume swelling samples were immersed in each agent for 72 hours at ambient temperature. Ethylene propylene is the only rubber which could withstand the solvent swelling of Agent Orange. Viton® and acid resistant Viton® both swelled to about 20 percent volume increase. Agent Blue blisters the latter two rubbers but does not, in general, alter their mechanical properties. Ethylene-propylene rubber was selected for gasket and O-ring application because of its resistance to solvent swelling. Table V summarizes the test results of these materials.

Nozzle Diaphragm. This application requires a high performance rubber with high elongation (>500 percent). Neoprene can be obtained in elongations above 500 percent but tests indicate that it is decomposed by contact with Agent Orange. Silicone rubbers have a high resistance to solvents. Fluorosilicone rubbers undergo solvent swelling to only about 10 percent increase in volume, whereas the silicone rubbers swell to over 150 percent. A fluorosilicone rubber (Dow Corning LS-2332V) was selected for use due to its superior resistance and high (500+ percent) elongation.

3.9.5 Coating Material

Fluorosilicone was chosen for the coating material for the inside of the agent tank because of its elongation and its ability to withstand swelling when exposed to herbicides. Fluorosilicone coated aluminum samples underwent long term explosure to the three agents at temperatures of 130°F without any change noted. Bond peel tests were conducted with the fluorosilicone coating. Samples were prepared as follows:

- Solvent cleaned and degreased

---

[1] Trademark

TABLE V. MECHANICAL PROPERTIES OF RUBBER MATERIAL IMMERSED IN HERBICIDE AGENTS FOR SEVENTY-TWO HOURS AT AMBIENT TEMPERATURE

SAMPLE MATERIAL	AGENT	TENSILE (psi)	ELONGATION (PERCENT)	HARDNESS (DURO) "A"	VOLUME SWELL (PERCENT)
Viton®	As Received	2,354	225	73	--
	Orange	2,262	275	62	22.94
	Blue	2,174	250	66	10.24
	White	1,750	250	70	7.70
Ethylene Propylene	As Received	2,345	200	76	--
	Orange	2,267	225	75	3.92
	Blue	2,191	200	77	0.22
	White	2,153	200	76	1.00
Acid-Resistant Viton®	As Received	2,205	350	62	--
	Orange	2,130	275	56	18.90
	Blue	2,059	300	62	4.75
	White	1,945	400	61	5.64

- Sand blasted
- Solvent cleaned, degreased, and primed
- Sand blasted and primed (50:50 mixture Dow Corning 1200 primer and Naptha). The mixture was used because of "chalking" of the primer at high concentrations. The sample preparation list is given in increased peel strength. The solvent cleaned and degreased surface was the lowest strength but was considered to be strong enough.

SECTION IV

MODULE ADAPTER DEVELOPMENT

4.1 MODULE ADAPTER REQUIREMENTS

The module adapter must:

- Be capable of carriage on the F-4, F-100, F-105, and A-1 aircraft with consideration also given to the F-111 A-7, and A-26 aircraft.

- Be capable of carriage in configurations using two, three, and four modules; the number and combinations of modules to be carried on each station on each aircraft to be determined by the weight capability of that station; any combination of modules to be readily and quickly filled and serviced on the ground or when suspended on the aircraft.

- Afford maximum usage of payload capacity for each aircraft.

- Be capable of carriage at speeds of up to 1.5 Mach at 35,000 feet and up to Mach 0.9 at sea level.

4.2 ANALYSIS OF THE PROBLEM

For the previous effort, the module adapter had two primary functions. First, the adapter provided a method of attaching the TMU-66/A modules in the required three- or four-module configurations (a two-module configuration was not a requirement at that time) which allowed up to four modules to be mounted on a single bomb rack. Second, the adapter provided housing for an electrical junction box which controlled the module dissemination sequence. During design analysis, determination was made that the individual module was a more suitable place for the central electronics, and the second adapter function was dropped. Thus, the objectives of the mating adapter design became:

- A low-cost, functional, and reliable method of attaching the PAU-8/A modules in the required configurations,

- Structurally capable of supporting the modules in all configurations, and

- Lightweight.

4.3 SYSTEMS ANALYZED

The module (mating) adapter consists of two main parts, the supporting structure and the attaching mechanism. Various designs were considered in this program.

To keep weight and corrosion at a minimum, aluminum was selected for all supporting structures. The five supporting structure designs considered (Figure 29) were as follows:

(1) A simple (continuous) extrusion

(2) Three castings or forging with exterior plates riveted or welded in place

(3) A large central square mechanical tube with formed supports

(4) Three main castings or forgings welded to a section of internal mechanical tubing

(5) Two main castings or forgings welded to a section of internal mechanical tubing.

The methods of attachment considered were (1) modules bolted directly to the support structure, (2) modules connected by latches or cams, and (3) modules secured to the support structure by straps which passed around each module.

A compressed vertical-spacing module-adapter configuration was also investigated. A comparison of the normal spacing and the compressed vertical spacing is shown in Figure 30. By compressing the vertical spacing so that only one inch separates the upper and lower modules, the overall depth of the configuration was reduced some 5.5 inches while the width was increased by 7.5 inches. Since the primary purpose for considering the compressed configuration was to increase the number of modules that could be carried on certain aircraft, as well as easing loading problems, a comparison was made of the maximum module-loading capacity of the specified aircraft. Table VI indicates the maximum number of modules that could be carried on these aircraft, utilizing wing stations only. Physical and weight compatibility were controlling parameters. Multiple pylon loadings were evaluated to check store-to-store clearance in determining maximum aircraft loadings. The only aircraft affected by store-to-store clearance considerations was the A-7; however, some aircraft store jettison would have to be accomplished in a set pattern to avoid store-to-store collision during separation.

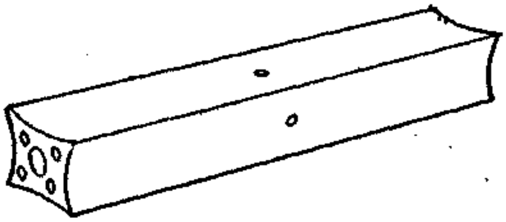

(1) CONTINUOUS EXTRUSION

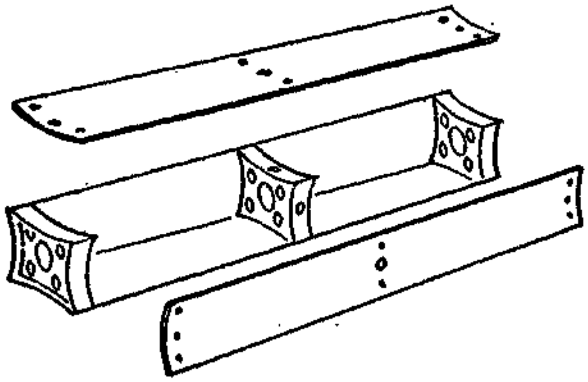

(2) CASTINGS WITH EXTERIOR PLATES

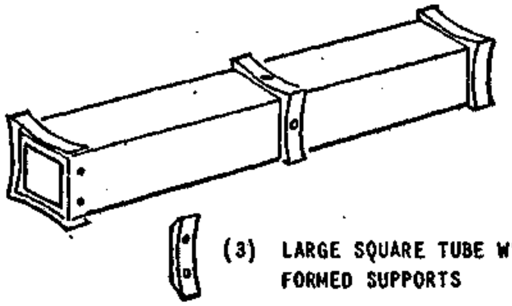

(3) LARGE SQUARE TUBE WITH FORMED SUPPORTS

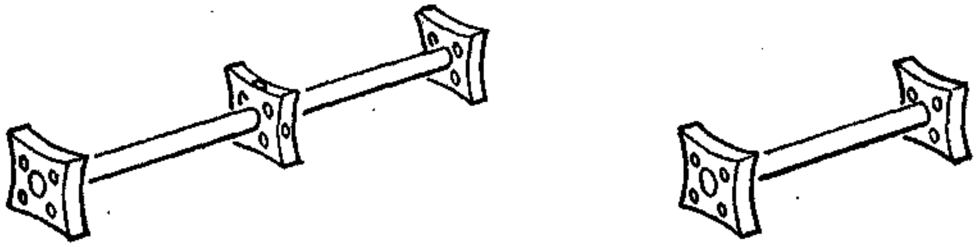

(4) THREE BULKHEADS WITH CENTRAL TUBE

(5) TWO BULKHEADS WITH CENTRAL TUBE

Figure 29. Module Adapter Designs

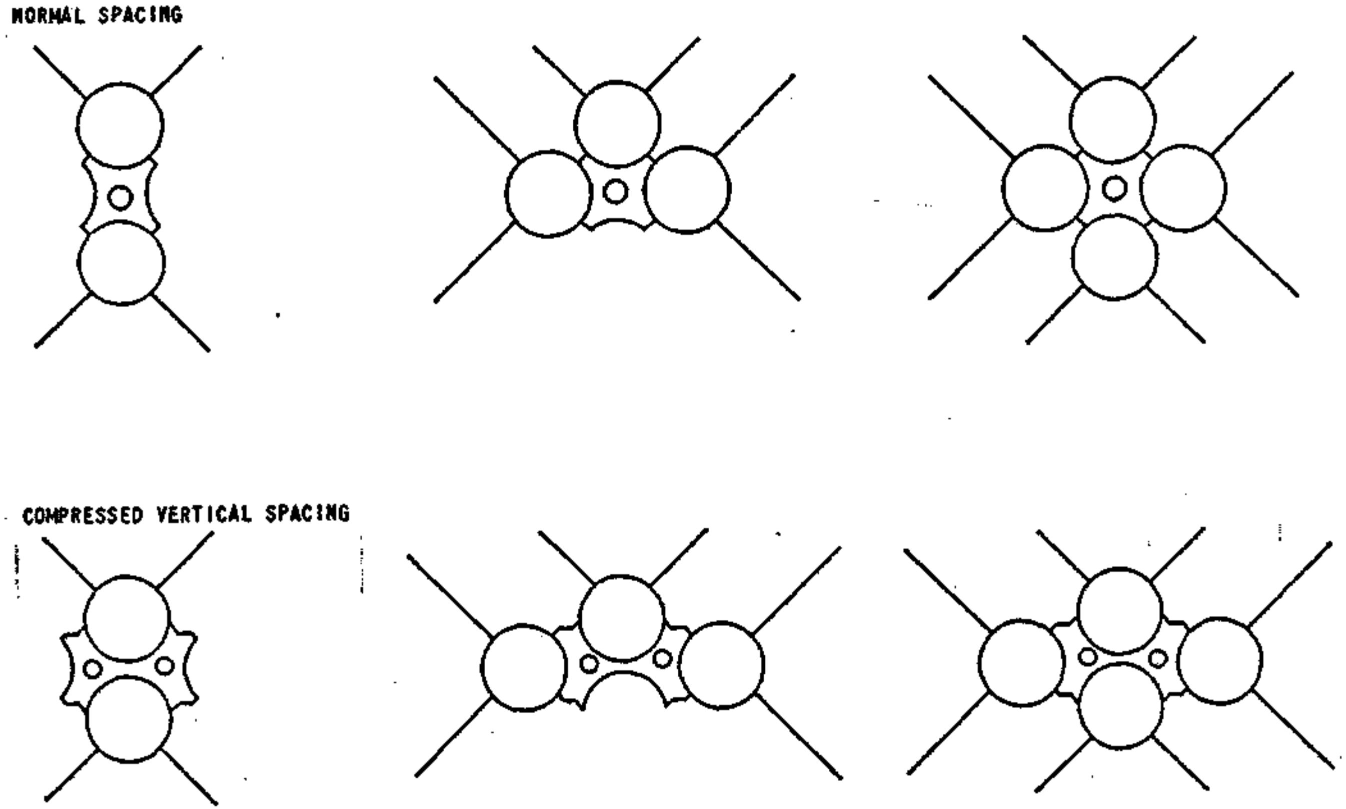

Figure 30. PAU-8/A Multiple Module Configurations

TABLE VI. PAU-8/A MAXIMUM LOADINGS

AIRCRAFT	MAXIMUM NUMBER OF MODULES PER AIRCRAFT		GAIN	LOSS
	NORMAL SPACING	COMPRESSED VERTICAL SPACING		
F-100	6	6		
F-105	10[a]	6		4
F-4	12	16[a]	4	
F-111 (26° Sweep)	32[a]	32[a]		
F-111 (72.5° Sweep)	12[a]	12[a]		
A-1	2	8[b]	6	
A-7	20	16		4
A-26	4[a]	4[a]		

[a] Requires Reduced Agent Loading (Slight Overload)

[b] Requires Reduced Agent Loading, Plus Acceptance Of 0.5 Inch Ground Clearance (Worst Case)

Using compressed vertical-spacing would cause both gains and losses in maximum loading capabilities, depending upon the aircraft involved. Other advantages and disadvantages of the compressed configuration have been determined, and the overall evaluation, based on present studies, is as follows:

Advantages of Compressed Vertical Spacing:

- Increases F-4C/D maximum loading by four modules per aircraft
- Eases loading problems on the F-4C/D
- Increases A-1E maximum loading by six modules, if 1/2-inch ground clearance (worst case) is acceptable.

Disadvantages of Compressed Vertical Spacing:

- Reduces F-105 maximum loading by four modules
- Reduces A-7D maximum loading by four modules
- Increases difficulty of filling lower module (two-and four-module configurations)
- Negates multiple-module wind tunnel data generated during previous effort.

Since the disadvantages outweigh the advantages, normal spacing was retained for development.

4.4 DESIGN CONSIDERATIONS

The five support structure designs were compared on the basis of the mating adapter design objectives. The results are summarized below:

(1) The single extrusion method would have fewer parts but would be extremely heavy compared with the other designs. An extrusion with multiple hollows would reduce weight, but tooling costs would be extremely high.

(2) Casting or forging three bulkheads and attaching exterior plates would result in a heavy part, and fabrication would be more costly than the other designs.

(3) The large central square mechanical tube with formed supports would be lightweight, but fabrication costs would be almost as high as in the second design.

In addition, the square tubing would have to be custom extruded which would increase the cost above Design No. 2.

(4) Three cast or forged bulkheads welded to a section of internal mechanical tubing would combine low weight and low cost, but the design itself would not be as satisfactory as other designs.

(5) Two cast bulkheads welded to a section of internal mechanical tubing would be the lightest and cheapest of all designs analyzed. Cast bulkheads would be slightly less expensive than forged bulkheads and would still possess the required strength. The round central tube would provide sufficient bulkhead support with minimal cost and weight.

Of the three attaching mechanisms analyzed, the strapping method was the most satisfactory. Since the latch or cam-type attachment would require module and mating adapter reinforcements to decrease localized stresses caused by this type attaching mechanism, the overall cost of the strap would not exceed that of latches or cams. In addition, the strap with its accessible take-up bolt would provide the easiest type of attachment.

4.5 SYSTEM SELECTED

The selected design consists of two cast bulkheads connected with a round central tube (Figure 31). A strap surrounds each mounted module and is secured to the bulkhead with quick-release ball-lok pins. A take-up bolt is used to tighten the bands. The forward bulkhead contains four locator pins which support forward and aft module loadings while simultaneously locating each module when mounting.

Aluminum-silicon-magnesium alloy 357 provides high strength cast bulkheads with good capability. The tube is standard 6061 aluminum stock, a low cost and weldable material for easy adapter fabrication. The high strength stainless steel straps, trunnions, and ball-lok pins in the support assembly provide a functional, reliable method of module attachment. The steel take-up bolt has electrolytic nickel-coating to prevent corrosion and to minimize wear.

4.6 PRODUCIBILITY ANALYSIS

Fabrication can be accomplished through established

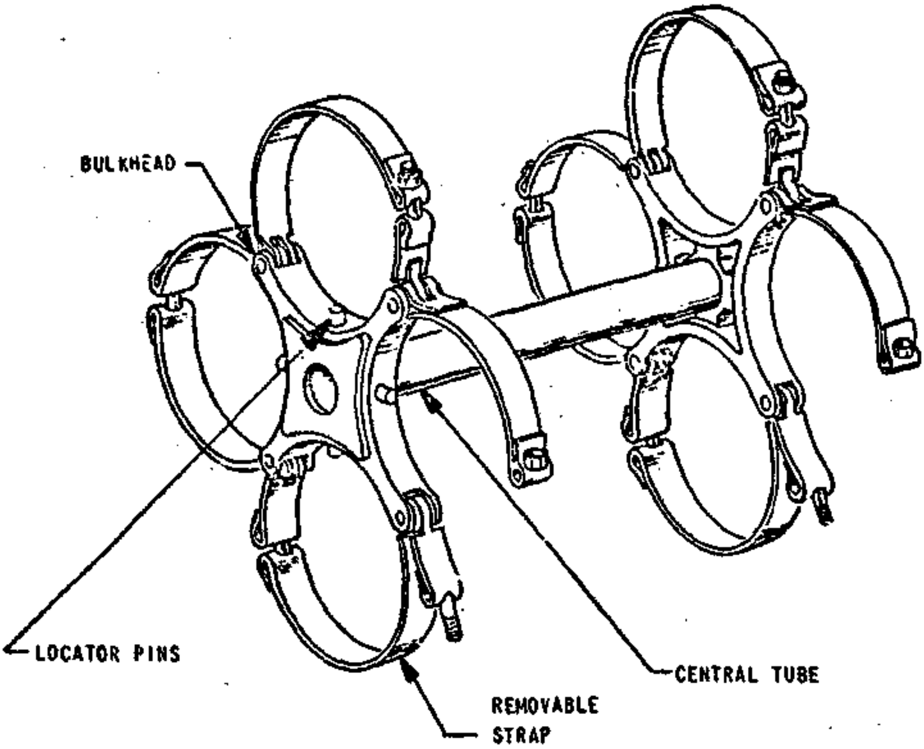

Figure 31. Module Adapter

manufacturing procedures. The two sand-cast bulkheads are identical except that the forward bulkhead has one additional machine operation in which the holes for the dowel pins are machined. The dowel pins are press fitted to the bulkhead and each bulkhead is then fillet welded to the central tube. The band, formed from standard size strap and spot welded around machined trunnions, is designed for easy production. The ball-lok pin and take-up bolt are both stock items.

4.7 TESTING AND MODIFICATION

During acceleration tests conducted at Picatinny Arsenal, Dover, New Jersey, under the direction of Armament Laboratory personnel, the module adapter failed at 9 g. The failure occurred in the forward bulkhead casting at the top dowel pin and mode of failure was tearing of the edge. To overcome this weakness, a one-inch thick 5083 aluminum plate was welded to the forward face of the forward bulkhead and a longer dowel pin was used in the bulkhead to increase the bearing area of the pin. Later structural tests conducted at Wright-Patterson Air Force Base, Ohio, indicated that the reinforced bulkhead was more than adequate.

SECTION V

DISPENSER TEST UNIT DEVELOPMENT

5.1 REQUIREMENTS

The dispenser test unit provides a functional check of the modules and aircraft arming system prior to takeoff.

5.2 DESIGN OBJECTIVES

The design objectives for the unit were as follows:

- Capable of checking the major circuits in the system and the connections between these circuits.
- Capable of checking the electrical power of the aircraft at the pylon.
- Capable of arming the system and operating the dissemination circuit both before and after the system is loaded on the aircraft, and after the system is connected to the aircraft circuitry.
- Capable of checking one, two, three, or four modules sequentially during any one test.
- Easily operated, compact, portable and rugged.
- Reliable and relatively maintenance-free.

5.3 DESIGN

The test unit is self-contained. Batteries are utilized to supply 28VDC for module functioning and a 6-volt battery is used for continuity checking. This provides the capability for complete evaluation of a fully-charged tactically-ready PAU-8/A. Rechargeable lead-dioxide batteries were selected for use because of their long shelf life, wide operating temperature range, high cycle life, and low cost.

The test unit requires five inputs from the items being checked: one from each module and one from the aircraft. These must be plugged in before the start of each test. These inputs are provided by a 15-foot cable connecting the test unit to the dispenser and the aircraft. The red-flagged arming pin must be pulled from each module before testing. After pulling the arming pin, all of the indicator lights on the test unit must be tested to ensure proper functioning. The lights are of the press-to-test type.

The test unit has ten test modes for checking the continuity of the control, arming, dissemination, and ground circuitry and for checking switch contacts, arming and dissemination functions, the aircraft electrical system, battery voltages of both 6- and 28-volt batteries, and battery charging requirements. The main selector switch is used to select the mode desired.

Mode One: Continuity

The main selector switch is turned to the "continuity check" position. The continuity section consists of a locking toggle switch, a momentary switch, and a rotary switch. The rotary switch makes possible the testing of one, two, three, or four modules sequentially. After selection of the module to be tested, the "ready" switch is actuated to light six red indicators marked as follows: (1) Arming Switch Pole #1; (2) Arming Switch Pole #2; (3) Arming Solenoid; (4) Dissemination Solenoid; (5) Arming Relay Coil; and (6) Arming Relay Contacts.

The "step" switch is then actuated. A motor steps this switch through eight positions in less than a second. In each of the eight positions, a continuity check is made on a major portion of the control circuitry. If the circuit checked is continuous, the appropriate red indicator light goes out.

Positions No. 1 and No. 2 check the continuity of the pressure switch circuitry. One of the amber lights marked "Pressure Switch Low" or "Pressure Switch High" must go on, indicating which position the pressure switch is in. Simultaneously, the remainder of the checkout circuitry is then automatically programmed for checkout in the appropriate mode: low or high pressure.

Position No. 3 checks the continuity of Arming Switch Pole No. 1, and Position No. 4 checks the continuity of Arming Switch Pole No. 2. If either of these two lights stays on, there is a discontinuity in that portion of the circuit. If both of these lights stay on, there is a strong possibility that the red-flagged arming pin has not been pulled. In this case, the pin must be pulled before continuing with the rest of the test.

Position No. 5 checks the continuity of the arming solenoid valve. If the circuit is continuous, the appropriate red indicator light will go out.

Position No. 6 checks the continuity of the dissemination solenoid valve. If the circuit is continuous, the appropriate red indicator light will go out.

Position No. 7 checks the continuity of the arming relay coil. If the circuit is continuous, the appropriate red indicator light will go out.

Position No. 8 checks the contacts of the arming relay for the possibility of a short. If no shorts exist, the appropriate red indicator light will go out.

If any of the lights stay on, the ready switch may be reset and the check may be made again by actuating the step switch. If the light or lights stay on again, the corresponding section of the circuitry must be repaired. The red light will stay on until the system is repaired, replaced, or until the test unit is switched to another mode. Before switching to another mode, the ready switch must be returned to the reset position.

Mode Two: Arm Check

The main selector switch is turned to the "arm check" position. All four green indicator lights in the arm check section should light sequentially as the arm check selector switch is rotated from 1 to 4. This check is an intermodular continuity test of the arming circuitry. The light numbers are directly related to the module numbers; for example, a continuity check of the arming circuitry traversing the interconnection cable and mating plugs and receptacles to module No. 1 will involve light No. 1, a check of module No. 2 will involve light No. 2, etc. If one or more of these lights fail to light, there is a discontinuity in the indicated circuitry.

Mode Three: Dissemination Check

The main selector switch is turned to the "dissemination check" position. All four green indicator lights in the dissemination check section should light sequentially as the dissemination check selector switch is rotated from 1 to 4. This check is an intermodular continuity test of the dissemination circuitry. The light numbers are directly related to the module numbers; for example, a continuity check of the dissemination circuitry traversing the interconnection cable and mating plugs and receptacles at module No. 1 will involve light No. 1, a check of module No. 2 will involve light No. 2, etc. If one or more of these lights do not light, there is a discontinuity in the indicated circuitry.

Mode Four: Ground Check

The main selector switch is turned to the "ground check" position. The momentary switch in the ground check section is then moved to the "check" position. All four green indicator lights should go on. This check is an intermodular continuity test of the ground circuitry. The light numbers are directly related to the module numbers. If one or more of these lights fail to go on, there is a discontinuity in the indicated circuitry.

Mode Five: Switch Check

This is a test of the continuity of the switch contacts and it also indicates which position the junction box mode selector switch is in. The main selector switch of the test unit is turned to the "switch check" position and the momentary switch in the switch check section is moved to the "check" position. There are four green indicator lights in this section. If the junction box switch is in Mode No. 1, only light No. 1 will light; if in Mode No. 2, lights No. 1 and No. 2 should go on; if in Mode No. 3, lights No. 1, No. 2, and No. 3 should go on, and if in Mode No. 4, all four lights should go on. If any of the lights that should light do not, a discontinuity exists in the switch contacts of switch circuitry.

Mode Six: Function

In this mode it is possible to arm the PAU-8/A and to disseminate the agents in any of the usual configurations. The main selector switch is turned to the "function" position. The system may then be armed and the dissemination function activated by the toggle switches located in the function section of the test panel.

Mode Seven: Aircraft Check

Mode No. 7 is a check of the electrical system of the aircraft. The main selector switch is turned to the "aircraft check" position. When the pilot actuates the arm switch in the aircraft, the red arm light in the function section should light. When the pilot depresses the pickle button in the aircraft, the red disseminate light in the function section should light. If either or both lights fail to operate, a failure is indicated in the electrical system of the aircraft.

Mode Eight and Nine: Battery Check

Modes No. 8 and No. 9 are voltage checks of the 28-volt and 6-volt batteries, respectively. After the main selector switch is turned to the proper position, the voltmeter is checked for a reading to determine whether the battery needs charging. At full discharge, the 28-volt battery will read 26.25 volts and the 6-volt battery will read 5.25 volts.

Mode Ten: Battery Charge

If the meter indicates that either battery needs charging, the main selector switch should be changed to the "battery charge" mode. In this mode, both batteries are put on charge until they register the proper voltage. When a battery is fully charged, the charging circuit automatically cuts off and puts the battery on a trickle charge. Two lights for each battery, located in the charging section, indicate which battery is charged or being charged.

If any of the tests in modes one through six should give unsatisfactory results, the system shall be considered inoperable until repaired.

SECTION VI

LOADING AND HANDLING ADAPTER DEVELOPMENT

6.1 REQUIREMENTS

A loading and handling adapter for the MJ-1 and MHU-83/E bomb lift trucks was required to load the PAU-8/A multi-module configurations on the aircraft.

6.2 DESIGN OBJECTIVES

The design objectives for the adapter were as follows:

- Must be compatible with the MJ-1 and MHU-83/E bomb lift trucks.
- Must be compatible with all configurations of the dispenser (1, 2, 3, or 4 modules).
- Must be capable of loading any of the required configurations on any station of the F-4, F-100, F-105, F-111, A-1 and A-7.
- Must aid in assembling the modules into 2, 3, and 4 module configurations.

6.3 DESIGN

The loading and handling adapter was made from aluminum for light weight during the ground handling operation of placing it on the bomb lift trucks.

The adapter has a base plate (Figure 4) which can be mounted to the table of the MJ-1 bomb lift truck and to the standard fork-type adapter accessory of the MHU-83/E bomb lift truck (Figure 32).

The height of the table of the MHU-83/E with a four-module configuration was in excess of an acceptable limit for the F-4 aircraft. As a result, it was necessary to use the bomb lift truck fork adapter in conjunction with the PAU-8/A loading and handling adapter base plate.

Cradles are mounted to the base plate to support the modules (Figure 4). The centerline cradles support the one-, two-, and four-module configurations (Figure 33 and 34) and the outer cradles support the three-module configuration (Figure 35). The bearing surfaces of the cradles are covered with rubber to cushion the modules and to prevent paint damage during handling.

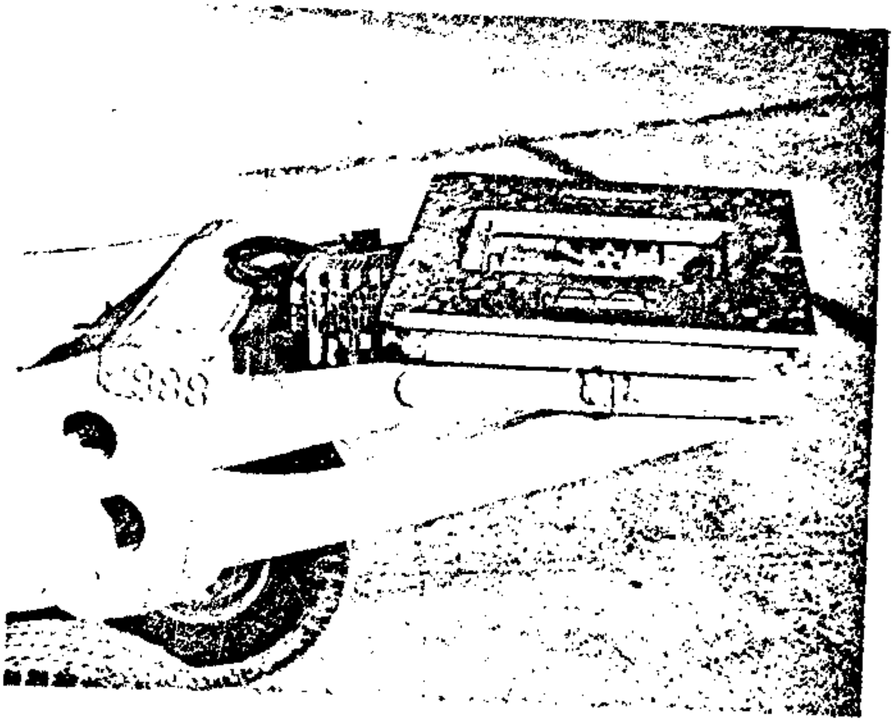

a. MJ-1

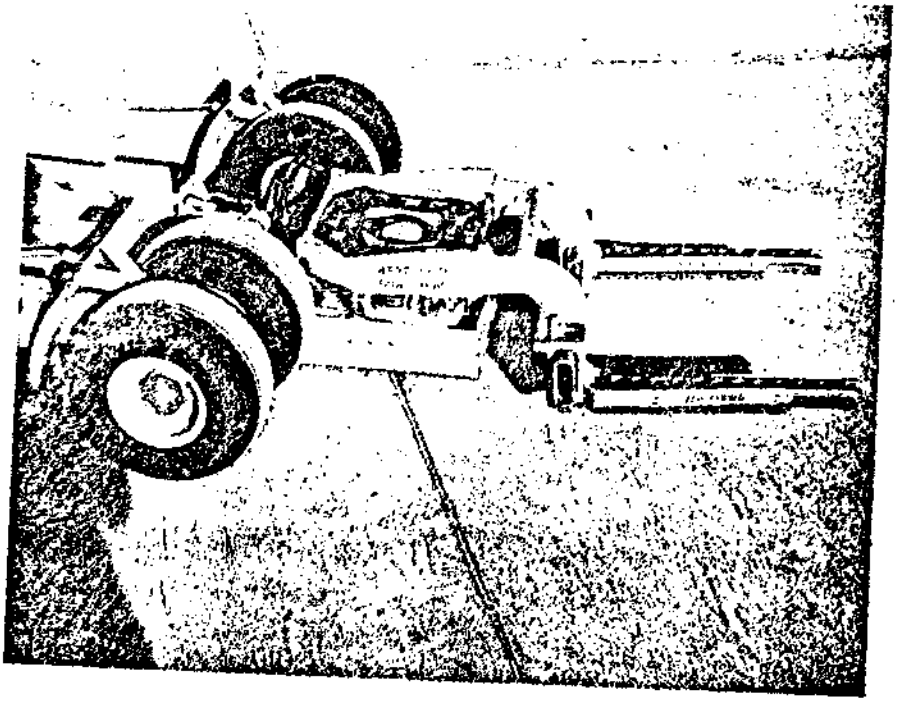

b. MHU-83/E

Figure 32. MJ-1 Table and MHU-83/E Fork Adapter

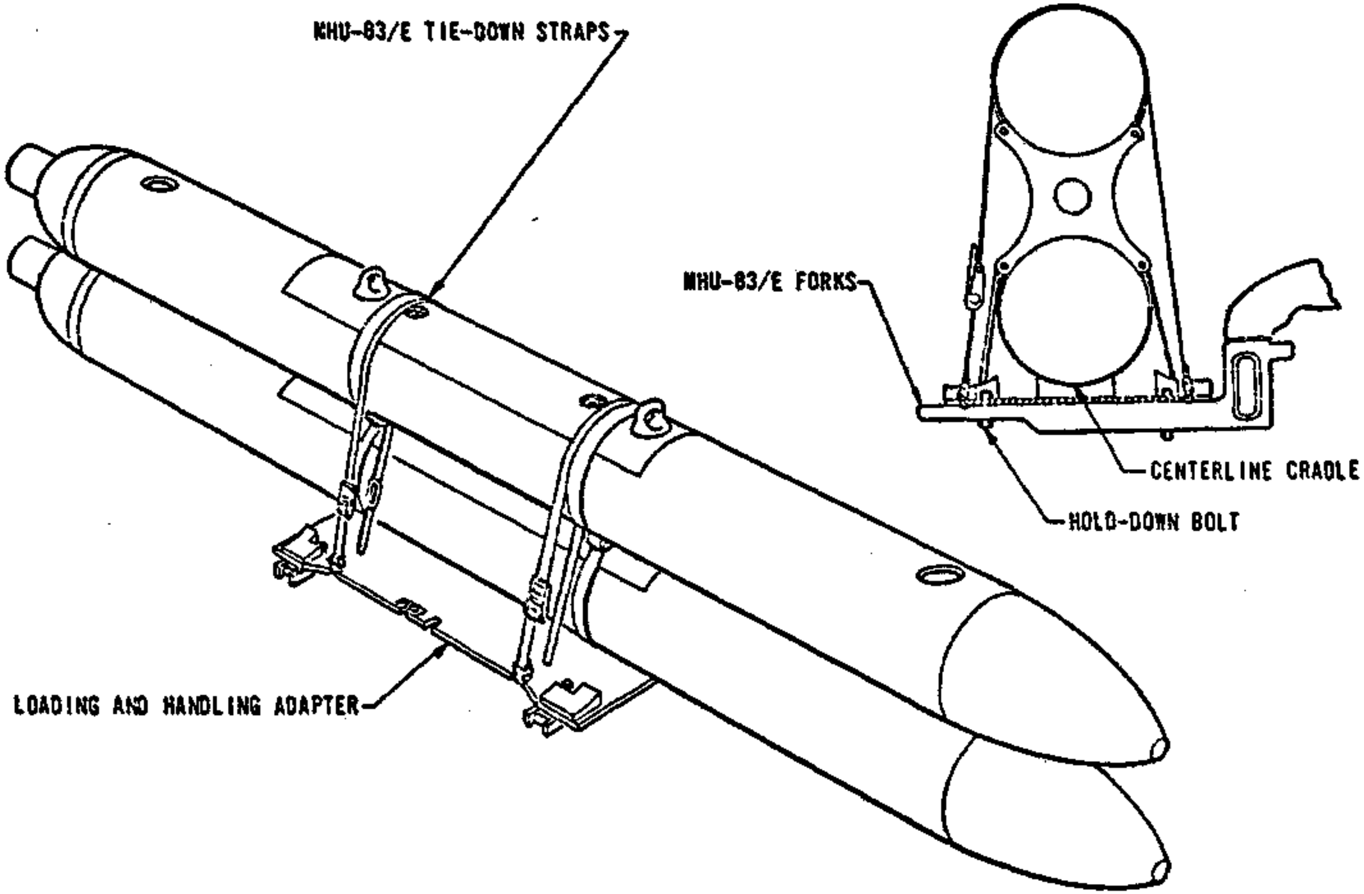

Figure 33. Two-Module PAU-8/A on Loading and Handling Adapter

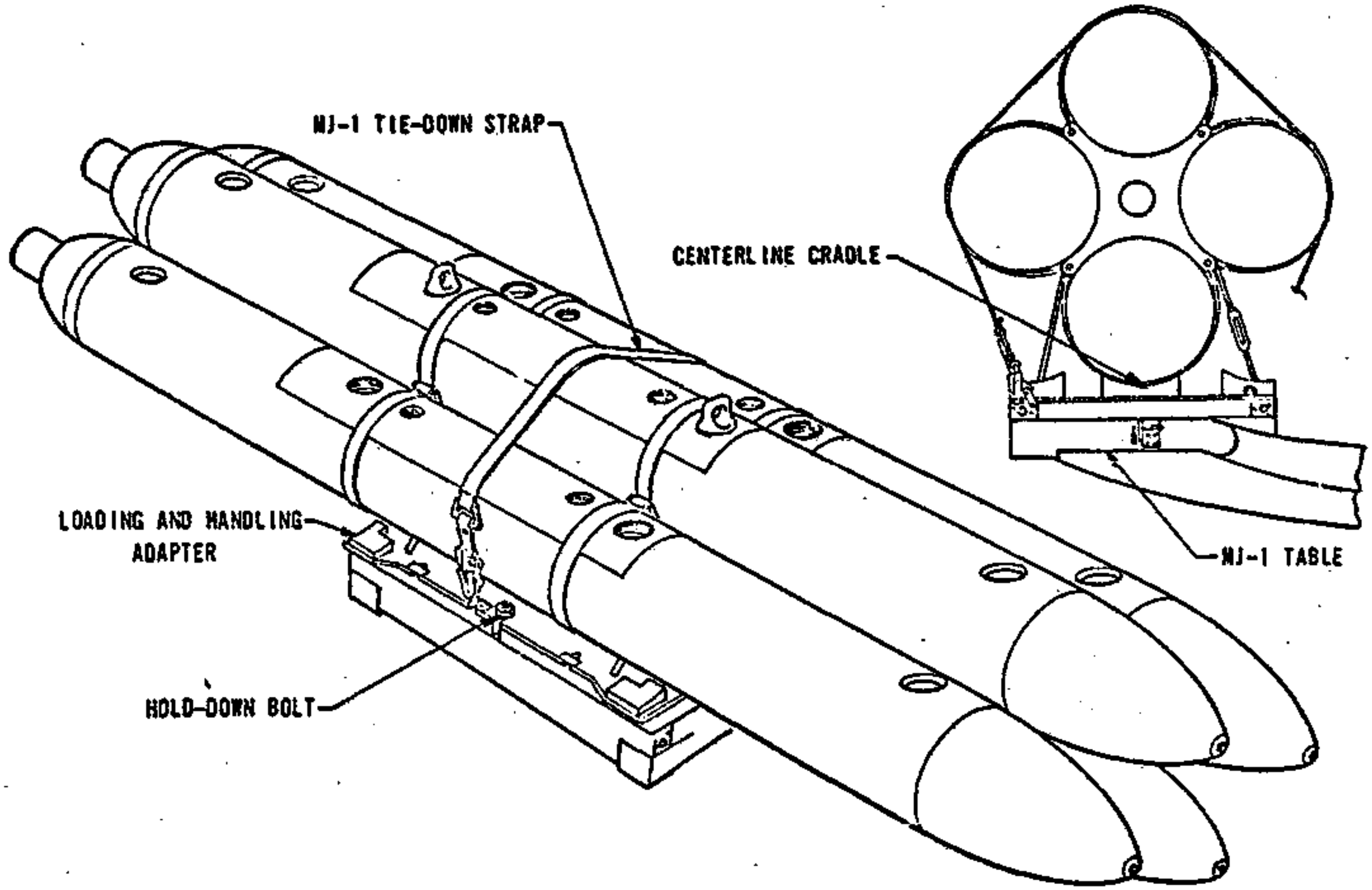

Figure 34. Four-Module PAU-8/A on Loading and Handling Adapter

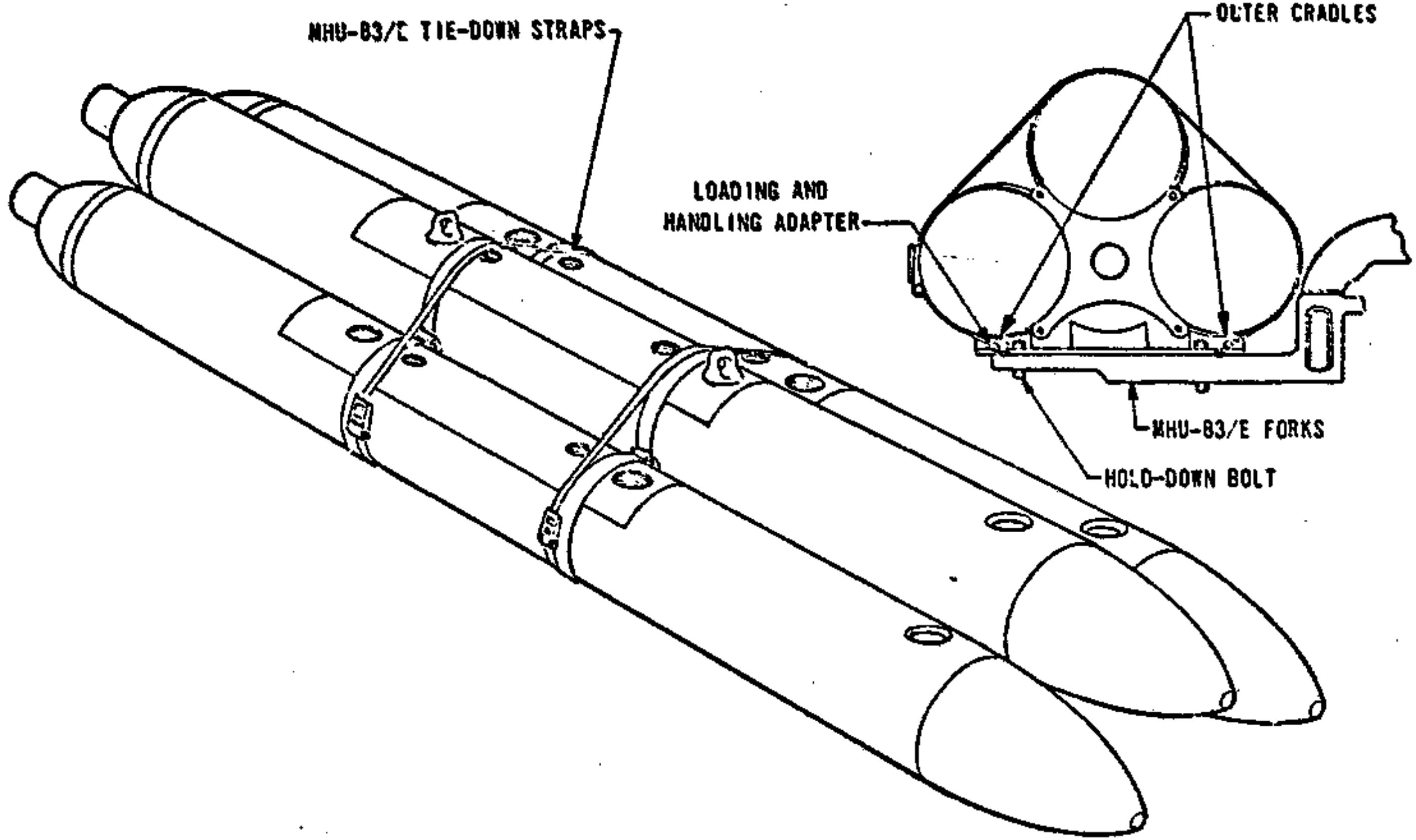

Figure 35. Three-Module PAU-8/A on Loading and Handling Adapter

Since the MJ-1 and MHU-83/E tables are limited in the amount they can be tilted, and the outboard station of the F-4 has a cant angle of 7-1/2 degrees and the A-1E has an incidence angle of 10-1/2 degrees, adapter blocks had to be provided for tilting the modules on the adapter to accommodate these stations. Figures 36 and 37 show the adapter with blocks in the A-1E and the F-4 loading configurations, respectively.

A mock-up of the loading and handling adapter was used with the MJ-1 bomb lift truck for the fit tests of the F-4, F-100, F-105, and F-111 (Section IX).

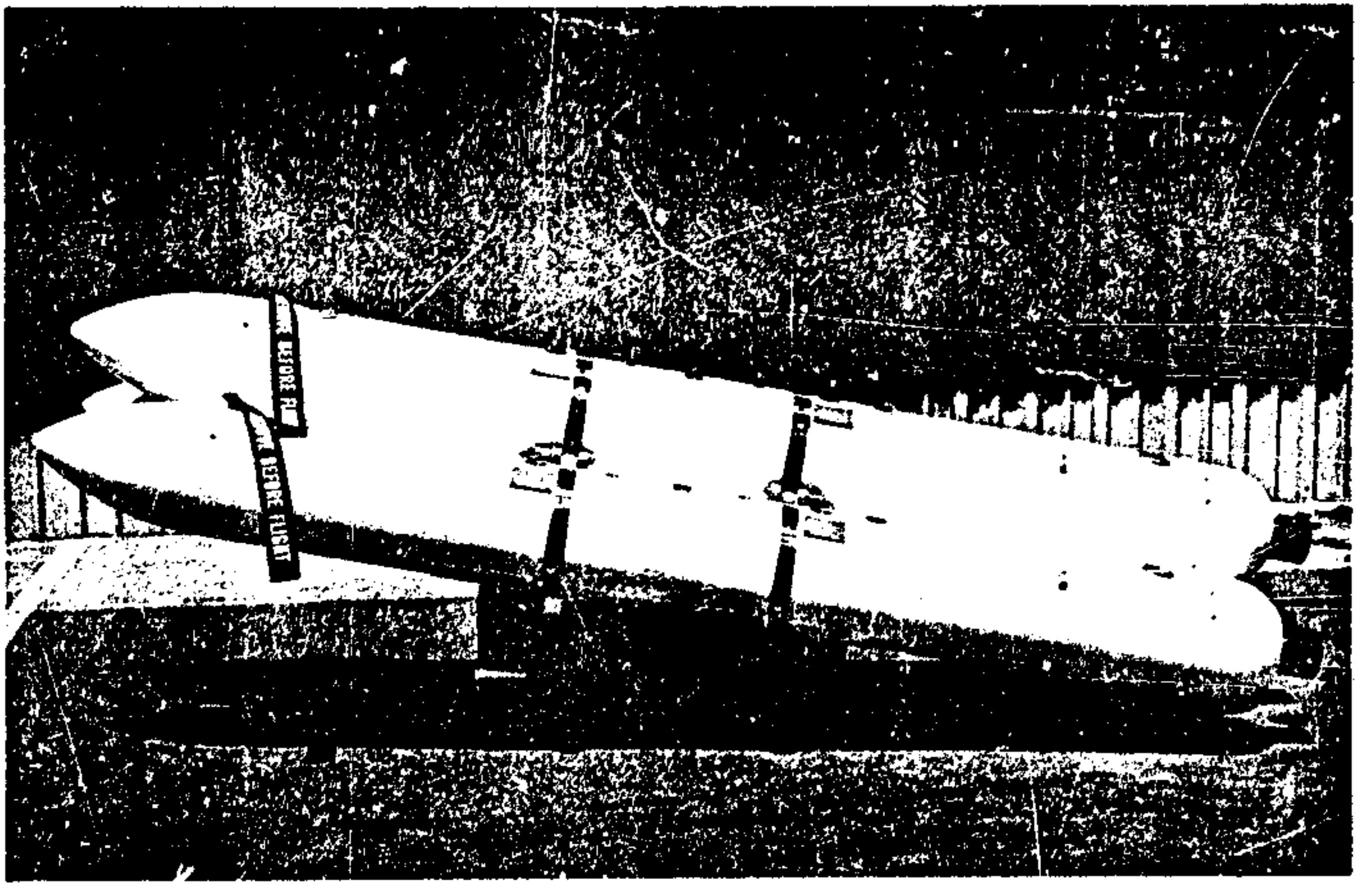

Figure 36. Loading and Handling Adapter With Tilt-Adjusting Blocks for Use With A-1 Aircraft

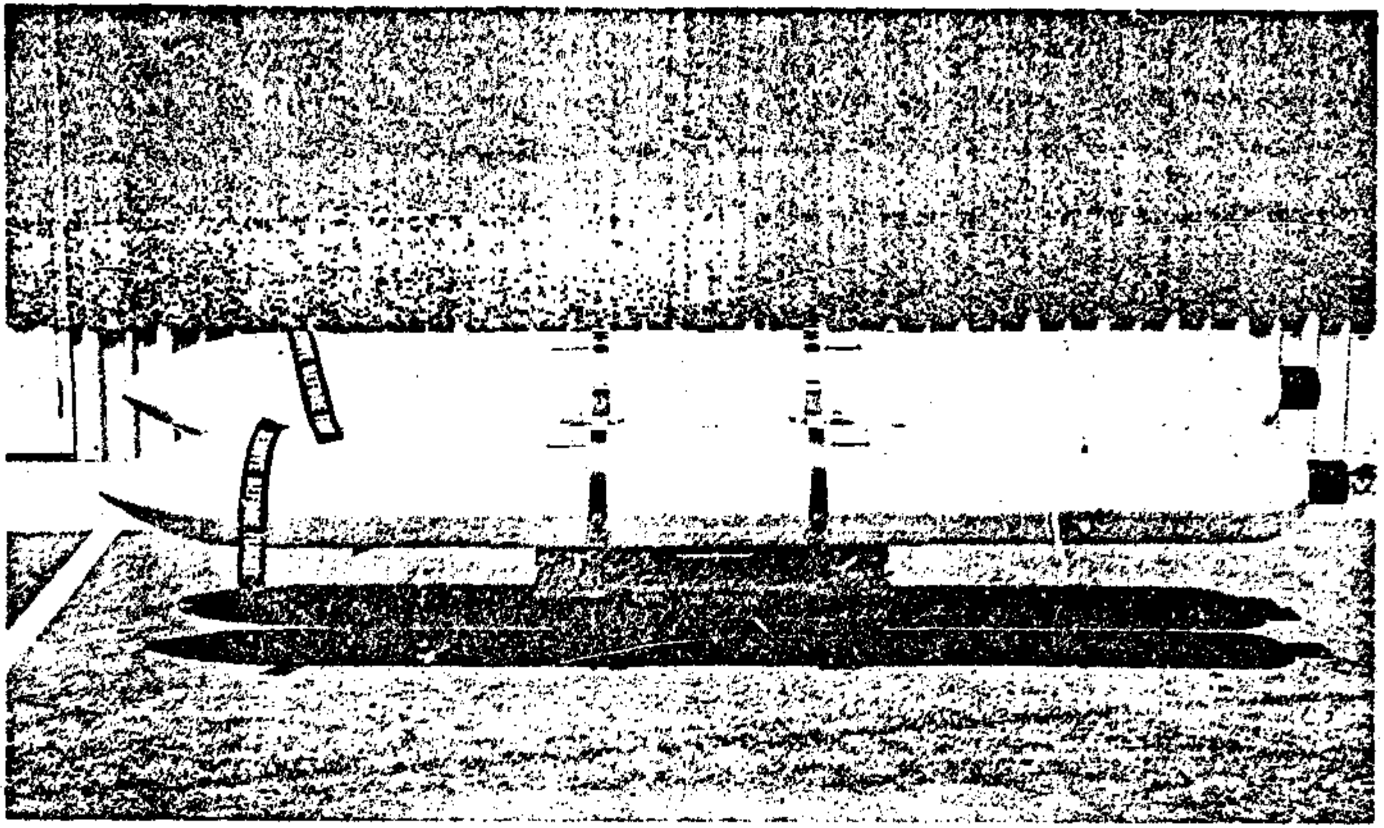

Figure 37. Loading and Handling Adapter With Tilt-Adjusting Blocks for Use With F-4 Outboard Stations

SECTION VII

SHIPPING CONTAINER DEVELOPMENT

7.1 REQUIREMENTS

Shipping containers for the PAU-8/A must meet the following requirements:

- Capable of shipping the PAU-8/A in the four-module configuration.
- Acceptable by common carrier for safe transportation at the lowest rate to the point of delivery.
- Capable of withstanding storage, handling and reshipment with no degradation of the spray system.

7.2 DESIGN OBJECTIVES

The shipping containers must be lightweight, with low cubic volume, and must be producible at low cost.

7.3 DESIGN

The following were considered in determining the most effective design for the four-module shipping container:

- Whether systems should be shipped with fins attached or removed,
- Whether systems should be shipped with the vertical centerline of the module assembly in the normal vertical orientation, or
- Whether the systems should be shipped with the module assembly rotated 45 degrees from orientation.

Shipping the PAU-8/A with the fins attached would require a very large and very heavy container; therefore, since the fins are easy to remove from and easy to attach to the modules, the container was designed for shipment of the system with fins removed but inclosed in the container.

The 45-degree orientation was chosen (Figure 38) for weight, volume, and cost savings. By rotating the four-module configuration 45 degrees from the normal orientation, the volume of the container was 20 percent less than that required for the system shipped in the upright orientation. Since the structural members in such a container are of smaller cross section,

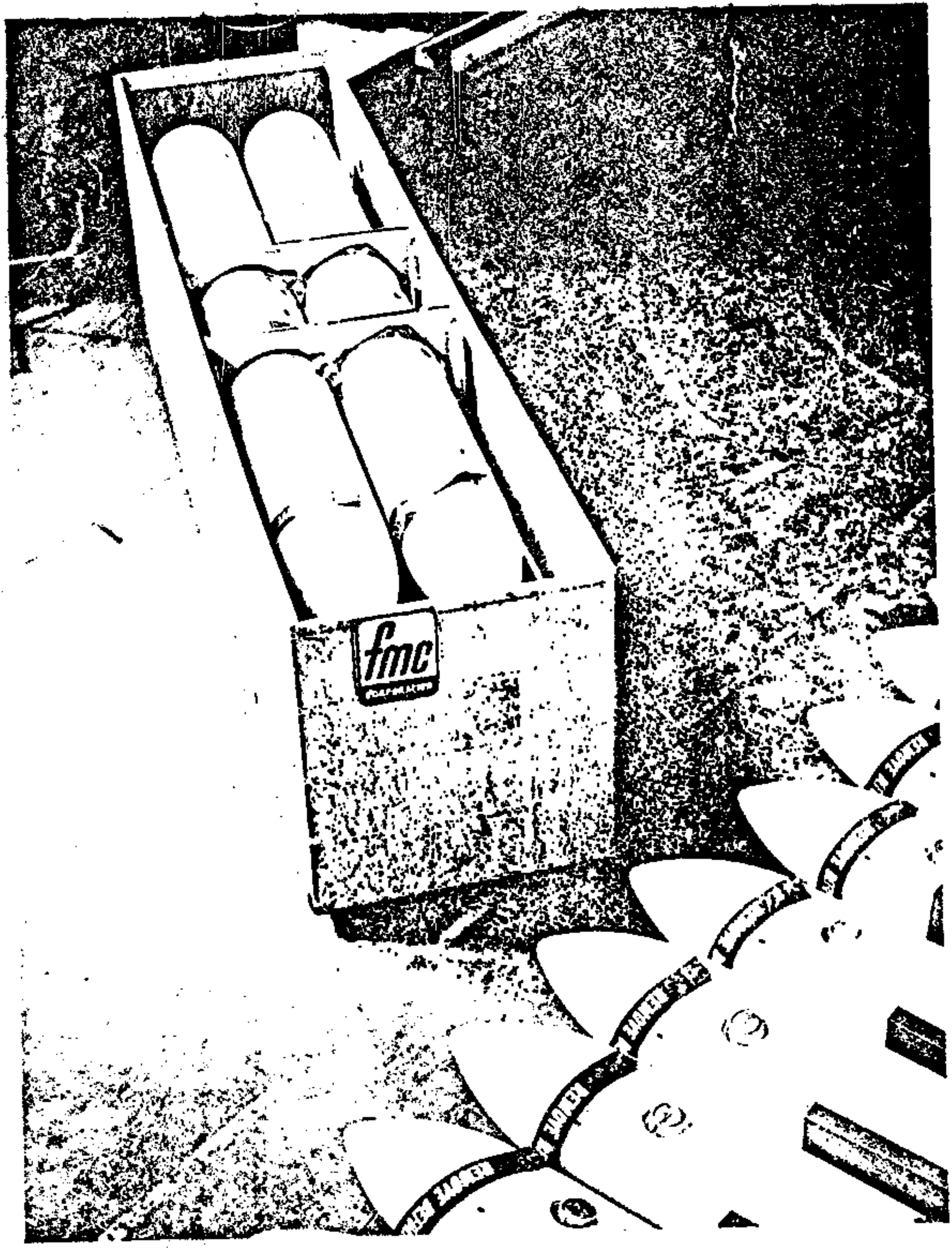

Figure 38. Shipping Container with Cover Removed

the weight savings would be approximately 75 percent. The 45-degree rotation causes no problem in loading and unloading the system since the four-module assembly can be picked up from the lugs in a side module. This rotates the four-module configuration to about the 45-degree position for loading.

The modules are supported in the container by two saddles at the band-support bulkheads. The container is completely inclosed and the fins, the fin attachment bolts, and the lugs are in separate compartments within the container.

The container is of the wire bond type and can be shipped and stored in a completely knocked down condition. To assemble the container, only the wire loops need to be connected together and eight steel straps applied, each around the two fin containers, one each around the two saddles, and four each around the top sides and bottom of the container.

SECTION VIII

CONTAMINATION HARDWARE DEVELOPMENT

8.1 REQUIREMENTS

Specific requirements for contamination hardware development were as follows:

- Must be compatible with the three-module configuration.
- Must reduce aircraft contamination when used on the F-4 aircraft.

8.2 DESIGN

At the time of the compatibility fit tests, the spray contamination on the inboard wing station of the F-4 was considered to be a problem. When flight tests were conducted at Eglin Air Force Base with single modules on the inboard wing stations of the F-4, excessive contamination occurred on the wing with the spray going up into the wheel well. Films taken of the spraying indicated that the air flow around the aft end of the module was causing the spray to go up the aft of the pylon and into the wheel well.

To prevent the air flow around the aft end of the module from being forced up, an air scoop was designed to pull air in from around the side of the module to the nozzle to reduce the influence of the upward air flow at the nozzle (Figure 39). The prototype hardware was designed to fit the three-module configuration since this is the configuration most likely to be flown on the F-4.

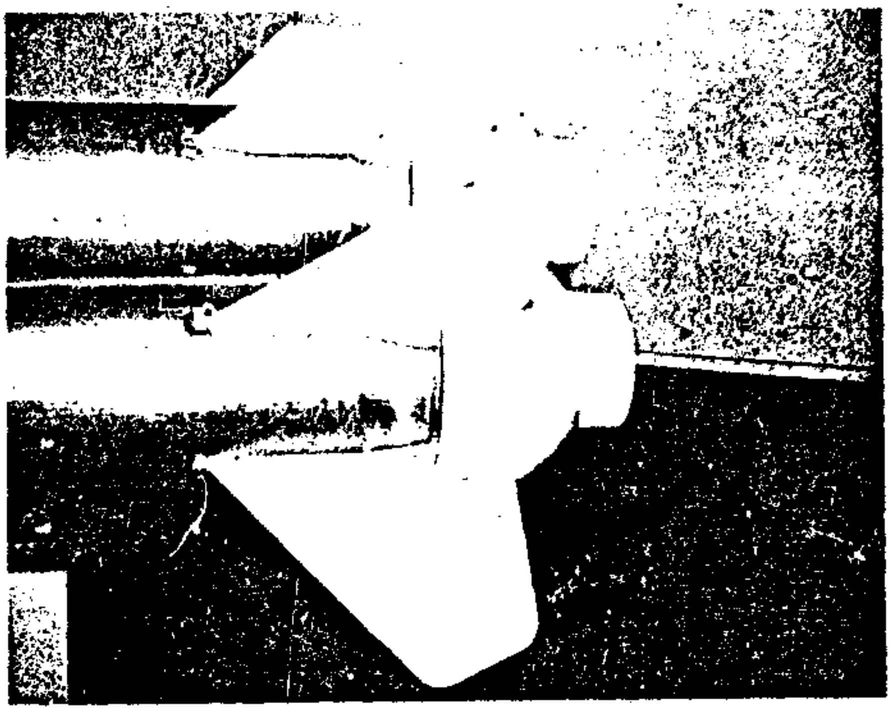

a. Side View

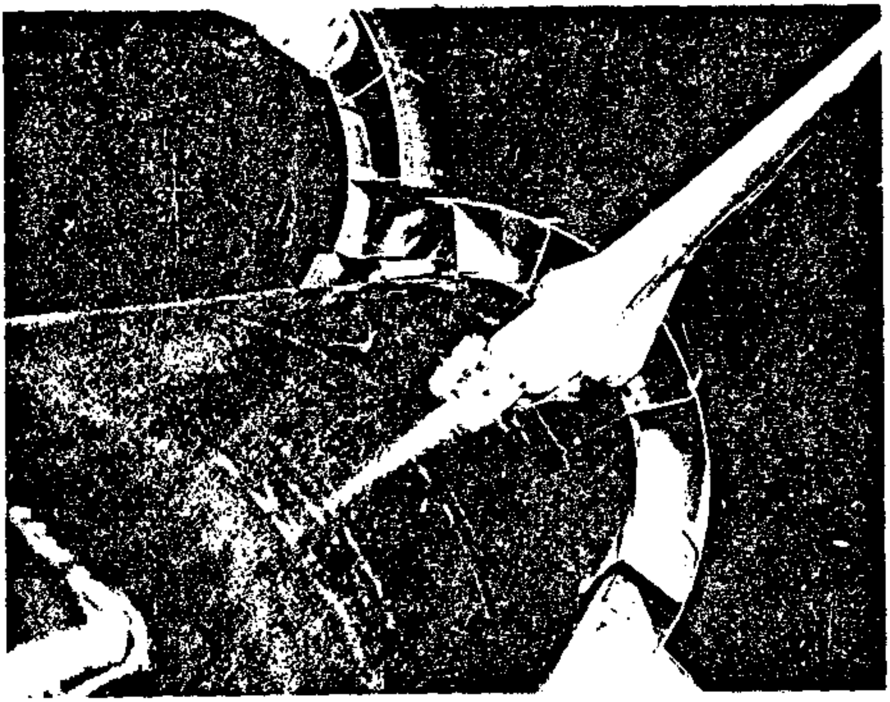

b. Air Inlet
Figure 39. Contamination Hardware (Turning Vane Kit)

SECTION IX

TESTING

Numerous static and dynamic tests were conducted during the program to evaluate and verify designs. The following paragraphs summarize the major tests.

9.1 TWO-MODULE WIND TUNNEL TESTS

Wind tunnel tests using 16 percent scale models were conducted to determine configuration modifications necessary to ensure stability of the PAU-8/A two-module configuration at Mach 0.5. (Previous wind tunnel tests on this configuration resulted in the determination that the stability margin was such as to make aircraft-store separation unsafe and that minimum stability occurred at Mach 0.5.)[b] All tests were conducted in the four-foot Trisonic Wind Tunnel at Douglas Aerophysics Laboratory, El Segundo, California. The five configurations tested are described in Table VII and shown in Figures 40 through 44.

A total of 21 good runs, including a repeatability run, were made. On the basis of producibility and drag considerations, as well as stability effects, configuration No. 2 was considered best.

The aerodynamic force and moment coefficient slopes of interest at low angles of attack or yaw are shown for the various configurations in Figure 45. Figure 46 is a closer look at stability margins and drag effects (a negative stability margin indicates the number of module diameters aft of the center of gravity where the center of pressure is located). Longitudinal stability is significantly affected only by configuration No. 3. However, longitudinal stability for the basic configuration is adequate and improvement in this direction is not as important as improvement in lateral stability. Lateral stability is significantly improved by any of the modifications. Configuration 5, however, produces a large increase in drag, which is detrimental to other flight characteristics. The aerodynamic data for the chosen configuration (No. 2) is presented in Figures 47, 48, and 49.

---

[b] Air Force Armament Laboratory Technical Report AFATL-TR-69-65, Chemical Anticrop Dispenser Development, May 1969, UNCLASSIFIED

TABLE VII. TWO-MODULE WIND TUNNEL CONFIGURATIONS TESTED

CONFIGURATION NUMBER	MODIFICATION DESCRIPTION
1	Basic Two-Module Configuration (Figure 40)
2	Four Short Fins (Figure 41)
3	Combination (Multi-Surface) Stabilizer (Figure 42)
4	Vertical Fin (Figure 43)
5	Drag Plates (Figure 44)

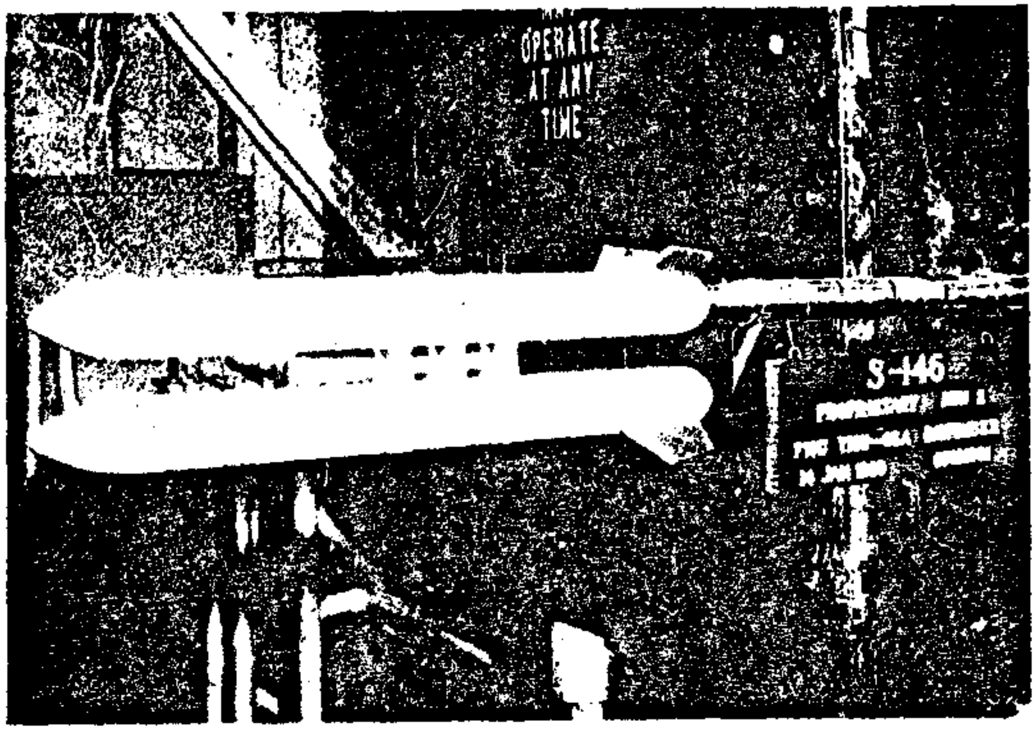

Figure 40. Configuration No. 1 - Basic Two-Module Dispenser

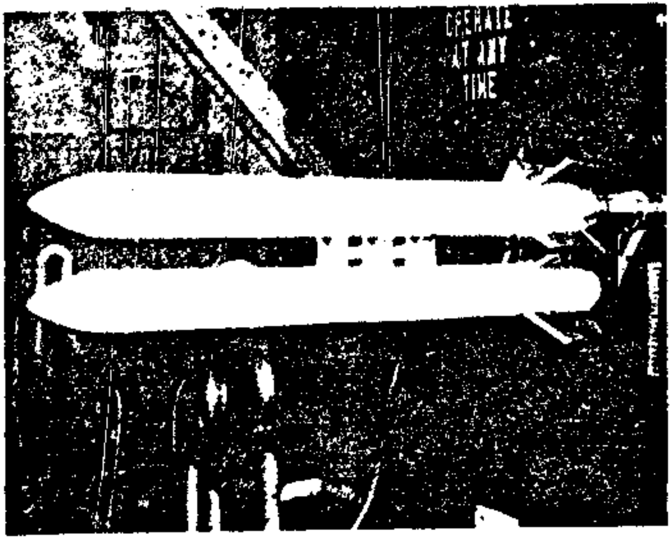

Figure 41. Configuration No. 2 - Four Short Fins

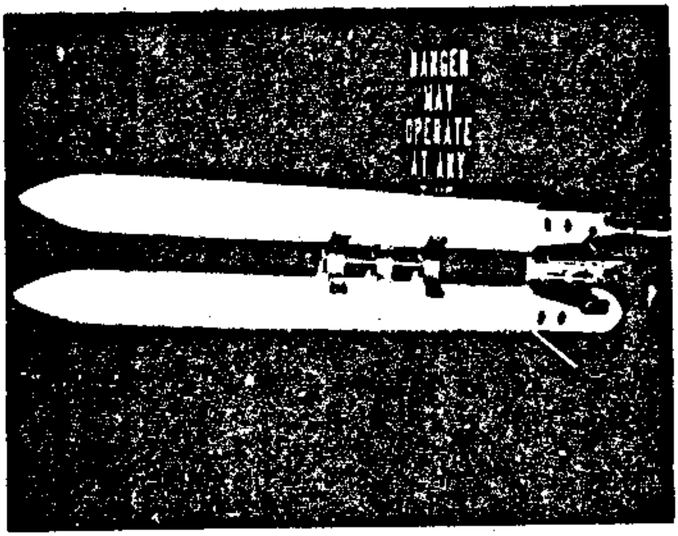

Figure 42. Configuration No. 3 - Combination (Multi-Surface) Stabilizer

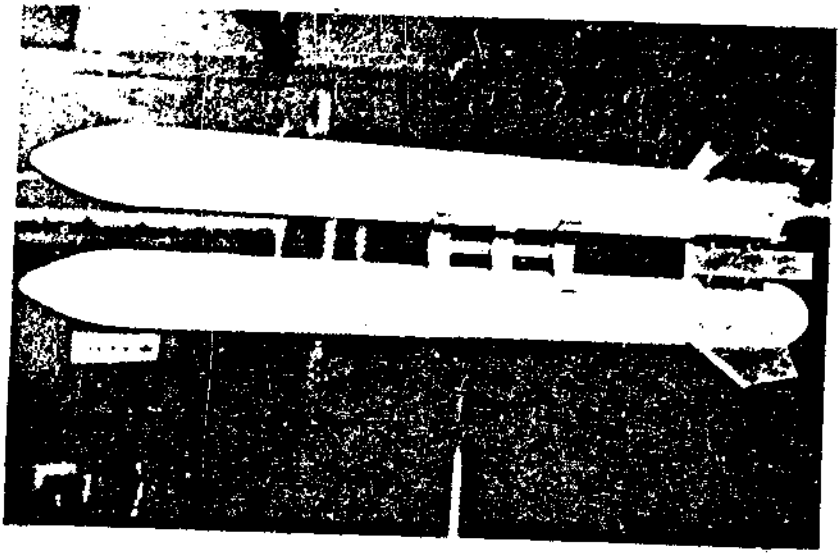

Figure 43. Configuration No. 4 - Vertical Fin

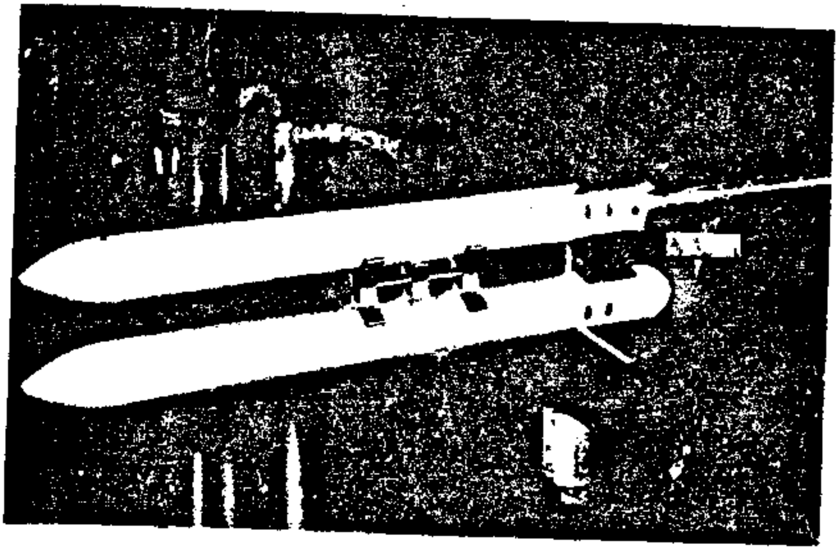

Figure 44. Configuration No. 5 - Drag Plates

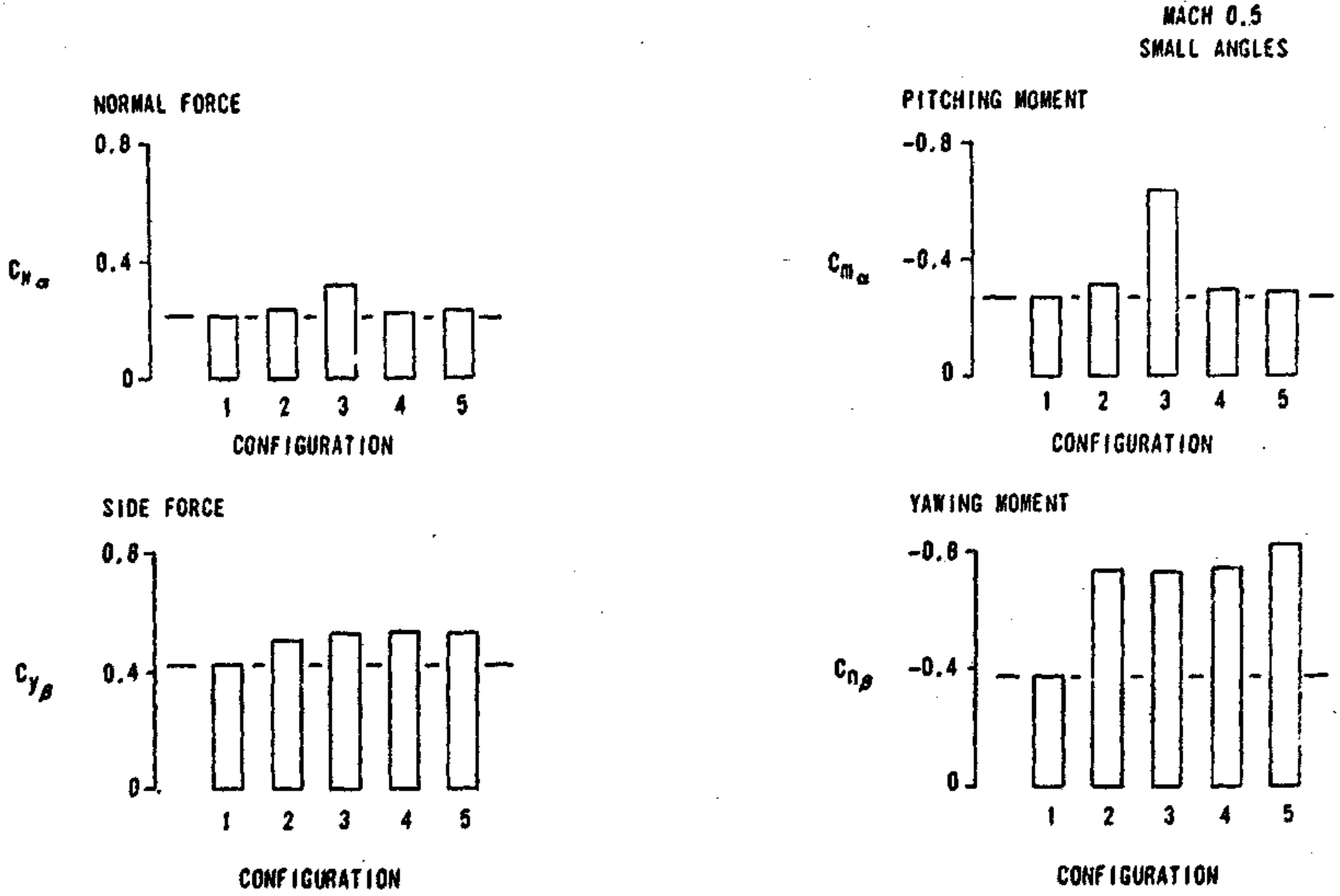

Figure 45. Wind Tunnel Test Results

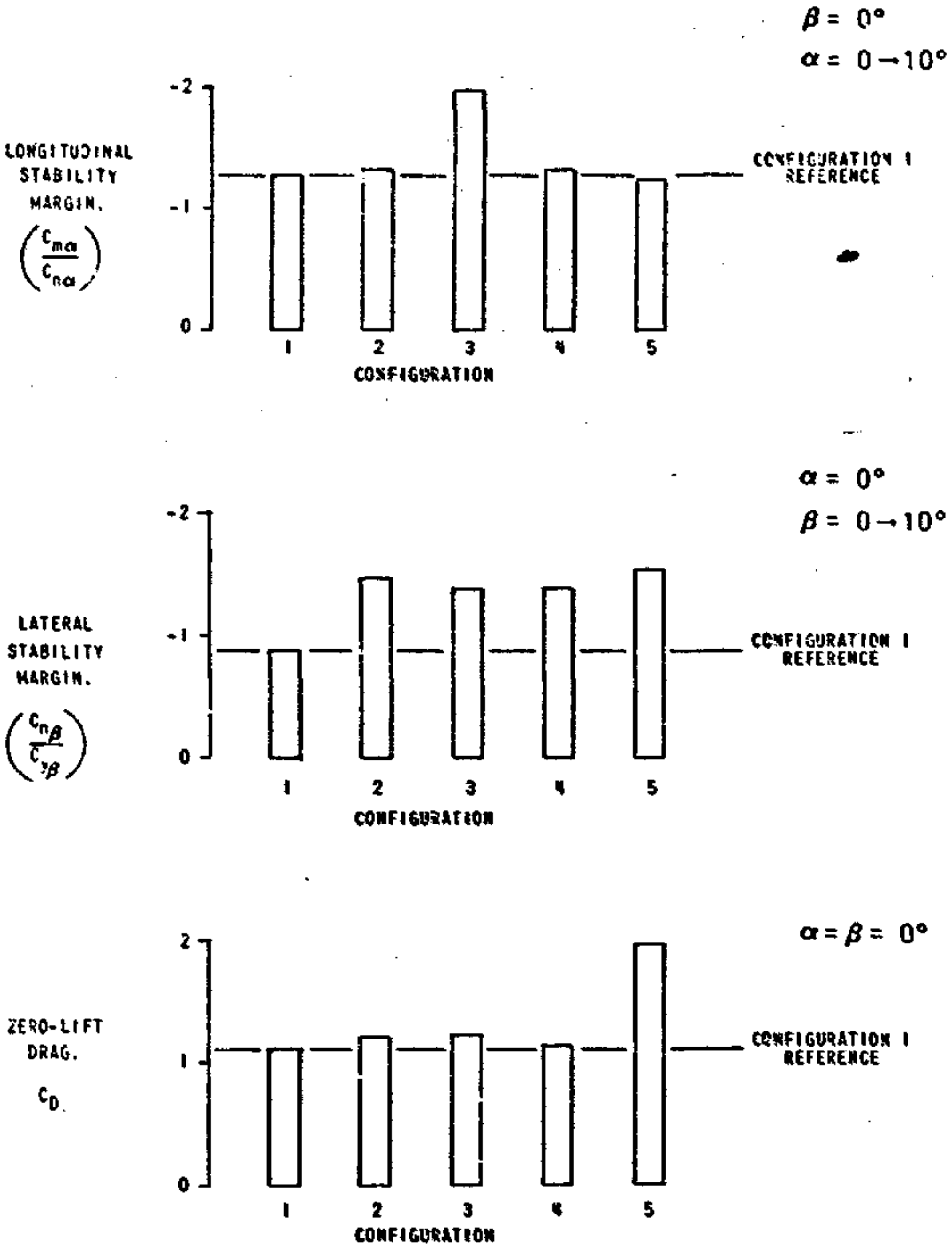

Figure 46. Wind Tunnel Configuration Comparisons

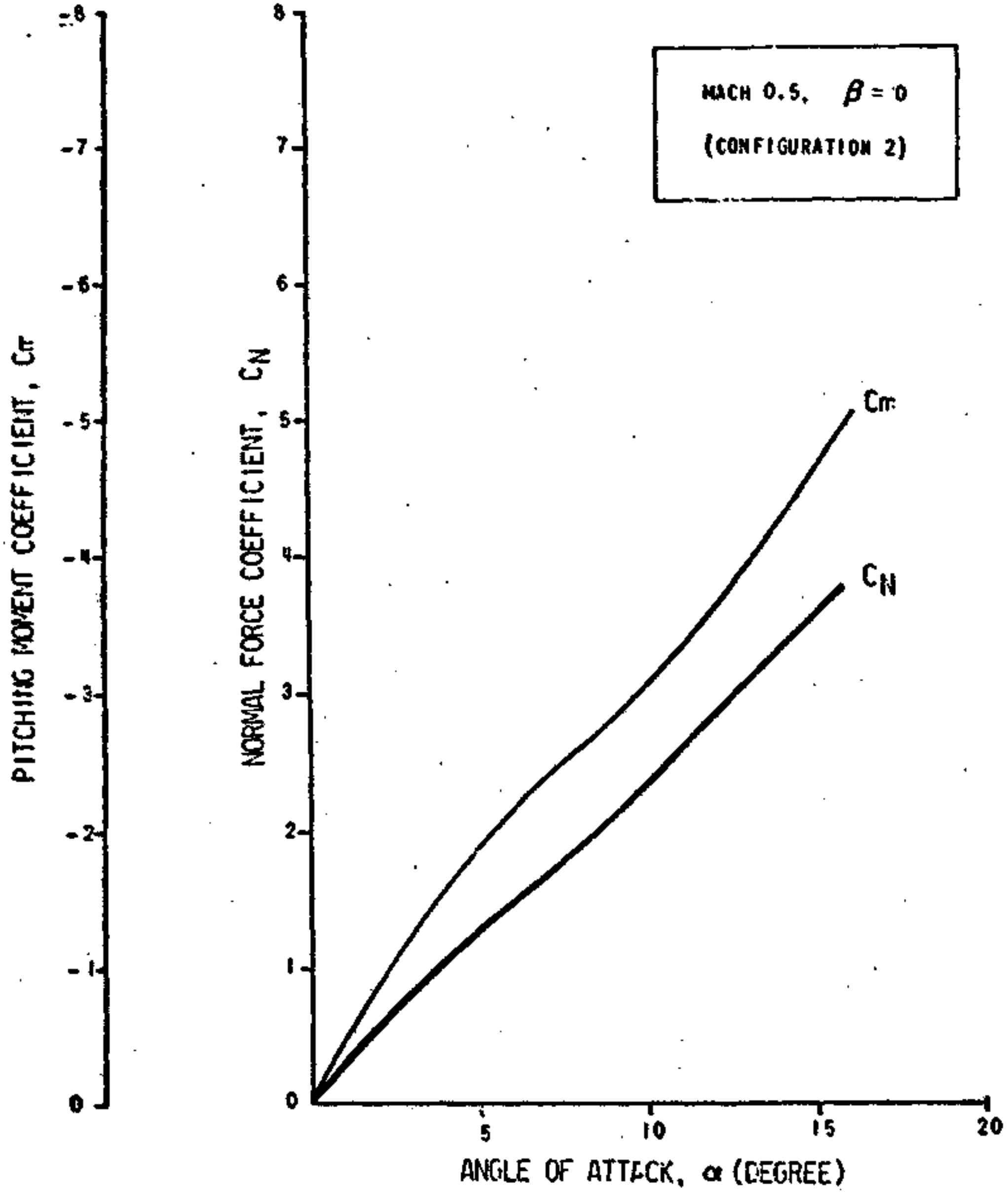

Figure 47. Longitudinal Stability of PAU-8/A Two-Module Configuration

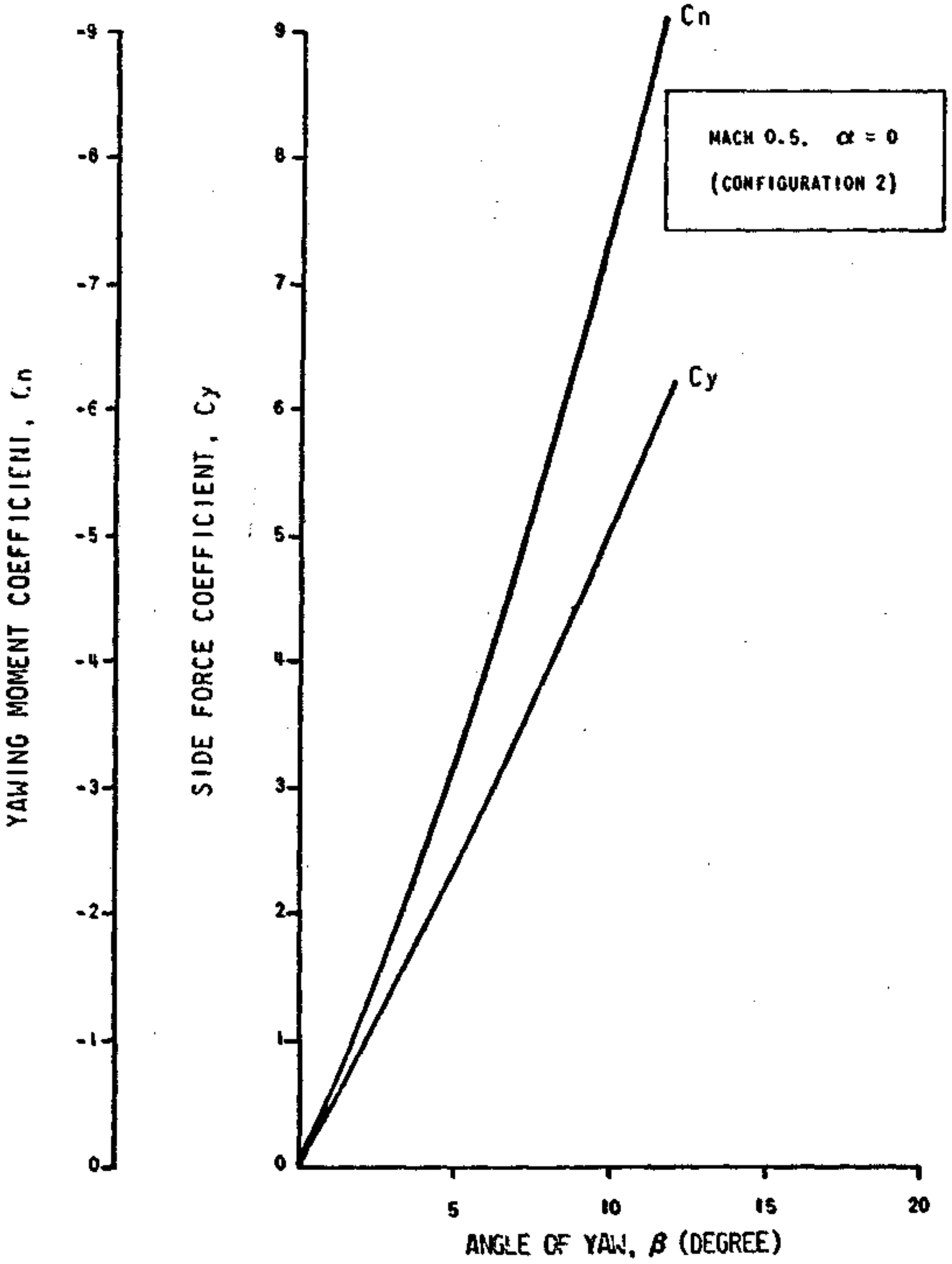

Figure 48. Lateral Stability of PAU-8/A Two-Module Configuration

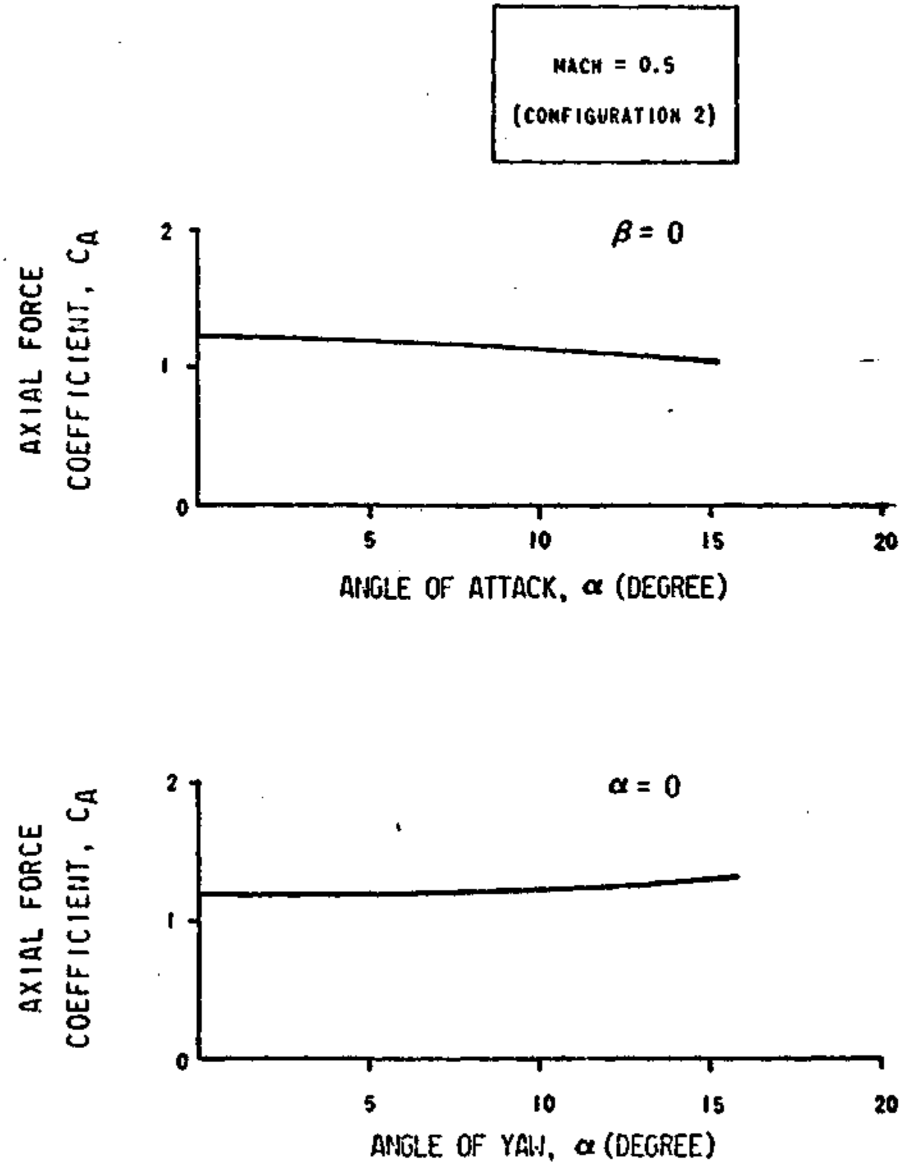

Figure 49. Axial Force Characteristics of PAU-8/A Two-Module Configuration

Wind tunnel data presents a confident picture of stability for the configuration chosen. Data scatter appeared small and repeatability was good, and Reynolds number effects were checked and found negligible. One run was performed at Mach 0.7 and showed only a slight increase in drag coefficient, indicating the lack of Mach number effects in this range.

9.2 TWO-MODULE CAPTIVE FLIGHT AND JETTISON TEST

A series of flight tests was conducted to determine the qualitative captive flight and jettison characteristics of a two-module PAU-8/A dispenser. The test store was flown and ejected from Aero-7A bomb ejector rack on an F-86 aircraft.

9.2.1 TEST STORE

The store used in the flight tests was a boiler plate replica of the two-module configuration. Due to limited ground clearance on the F-86 test aircraft, a full-scale two-module configuration could not be used; consequently, a sub-scale (65 percent) version was used (Figure 50). This scale was based on ground clearance considerations for safe flight. The aerodynamic characteristics of the scale store were the same as the full-size item; the magnitude of the forces and moments was reduced due to the difference in scale.

To achieve dynamic similarity between the test store and the full-scale item, the mass and moment of inertia were scaled according to the methods of reference.[c] The "heavy model" technique, which results in an accurate portrayal of the store separation trajectory, was chosen.

The test store represented the two-module configuration in the full condition. This was chosen because a full system results in the minimum stability margin. The scaled weight of the test store was 655 pounds, with a mass moment of inertia of 80 slug-ft^2 in both pitch and yaw.

Flow tufts were applied to the aft end of the store in an effort to determine general flow patterns and flow separation points under various flight conditions.

---

[c] NACA Report NACATIN 3907, Similitude Relations for Free-Model Wind-Tunnel Studies of Store-Dropping Problems, January 1957, UNCLASSIFIED

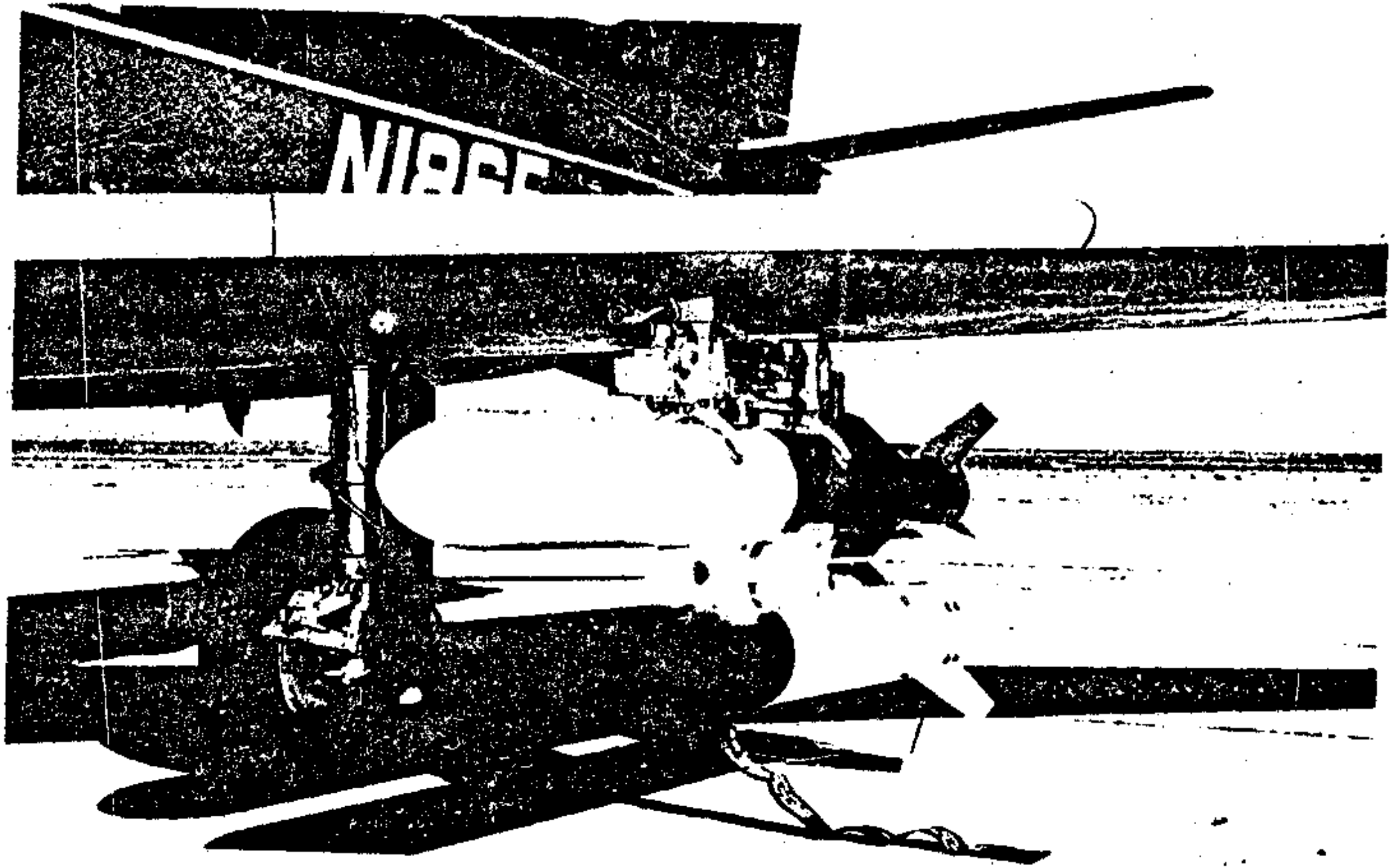

Figure 50. Two-Module PAU-8/A on F-86 Aircraft (Sixty-Five Percent Scale)

9.2.2 Captive Flight Tests

The captive flight phase of the test consisted of two sorties in which air speeds up to 475 KIAS were achieved. Flow patterns along the tufted aft end of the store were determined through the use of the on-board camera. The primary flight conditions and maneuvers performed during the captive flight phases are shown in Table VIII. The straight and level flight phase was performed at a pressure altitude of 10,000 feet; maneuvers were performed at 5,000 feet.

TABLE VIII. FLIGHT MANEUVERS FOR TWO-MODULE CAPTIVE FLIGHT TESTS

MANEUVER	AIRSPEED (KIAS)
Straight & Level	250
Straight & Level	300
Straight & Level	350
Straight & Level	400
Straight & Level	430
Straight & Level	450
Straight & Level	475
Left Yaw	325
Right Yaw	325
Wings-Level Pullout (2g)	325
Left Roll	350
Right Roll	350
Landing Configuration	150
Landing Configuration	115

Left wing down-trim was required at 350 KIAS; increases in speed beyond this point required less significant trim changes. Buffet onset for the F-86 with the two-module store was 430 KIAS, with the buffet increasing in severity as speed was increased. At 475 KIAS, the high frequency buffet was severe, and high speed tests were halted at this point. Yaw maneuvers indicated that the store greatly increased the lateral (directional) stability of the aircraft.

Flow pattern films taken at 64 frames per second indicated reasonable flow conditions during all of the flight conditions investigated. In general, the captive flight flow followed the stream lines shown in Figure 51 even during maneuvers. Flow separation did not occur until the flow had reached the boattail, and the separation point tended to move forward as speed increased. At no time during the flight tests did gross flow separation occur forward of the boattail.

9.2.3 Jettison Test

The store was ejected from the F-86 while the aircraft was in level flight at 350 KIAS (367 KTAS) at an altitude of 2,500 feet AGL (approximately 4,800 feet MSL). A T-33 aircraft was used as a chase plane to view and film the jettison. Separation of the store from the F-86 aircraft was clean and positive. A slow roll to the left started shortly after ejection, and the store reached a roll angle of 90 degrees approximately 60 feet below the aircraft. The store was observed to be completely stable throughout its flight. The pilot reported that the ejection reaction on the aircraft was mild and that no handling difficulties were experienced at ejection.

9.2.4 Conclusions

Based on the results of this jettison test, and considering the wind tunnel data and results of the computer simulation of separation characteristics, it has been established that the two-module PAU-8/A configuration is a stable store which reacts to ejection in a normal manner. Its separation characteristics may, therefore, be predicted with the same degree of accuracy as any other high density, stable airborne store. In general, the two-module PAU-8/A configurations may be considered safe to jettison under normal flight conditions.

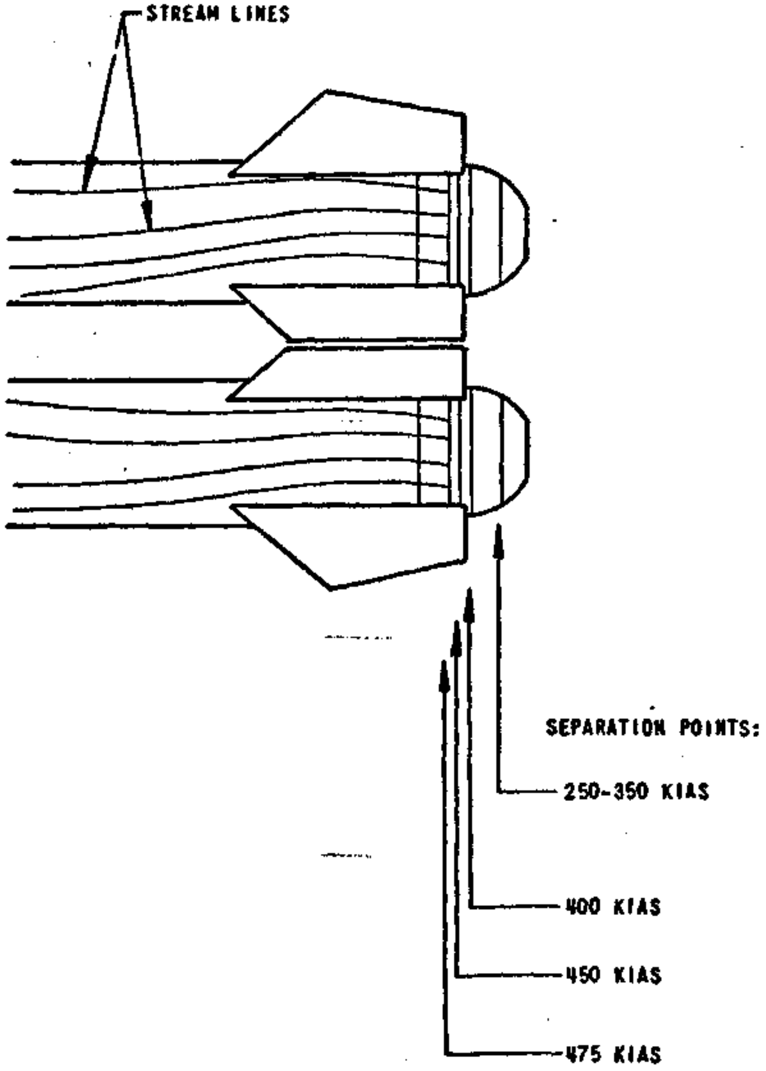

Figure 51. Captive Flight Flow Patterns

9.3 AIRCRAFT PHYSICAL COMPATIBILITY TESTS

The purpose of these tests was to verify aircraft/store physical compatibility findings from a previous study wherein aircraft compatibility drawings were used. Because certain detail features are sometimes omitted from compatibility drawings and since compatibility drawings are relatively small scale (1/16), fit tests provide a realistic, final check of physical compatibility.

9.3.1 Test Equipment

Full-scale PAU-8/A mock-ups of fiberglass shells filled with low density foam were used for the fit tests. A mock-up module mating assembly and actual store fins were used to create one-, two-, three-, and four-module configurations as required.

9.3.2 Fit Tests

The first series of fit tests was conducted at Nellis Air Force Base, Nevada, on the F-4, F-100, F-105, and F-111 aircraft. In addition, the MJ-1 and MHU-83/E bomb lift trucks were checked for compatibility. The MJ-1 with the proposed (simulated) loading and handling adapter plate was used for the fit tests. The second series of fit tests was conducted at the Naval Air Station, Lemoore, California, on Navy models of the A-1 and A-7 aircraft. No storage handling gear was available for these tests, and the stores were mounted by hand. However, loading from the side with either the MJ-1 or the MHU-83/E appeared feasible for both aircraft. Table IX shows a summary of the fit tests results.

9.4 DROPLET SIZE AND DISPENSER AIRWORTHINESS TESTS

Aircraft flight tests were conducted on:

- GFE supplied modules and nozzles
- GFE supplied modules and test nozzles
- GFE supplied modules and prototype nozzles
- Final module and nozzle design

Six series of tests were conducted to determine the droplet size of the spray and airworthiness of the PAU-8/A. Droplet size samples were obtained by arranging 5x6-1/2 inch Kromekote cards as shown in Figure 52. All tests were conducted at Fallon Naval Auxiliary Air Station, Nevada (altitude —4150 feet above sea level). All flights were made at 100 feet AGL. Table X summarizes test conditions and results. The nozzles used in the tests are described in Table XI.

TABLE IX. FIT TEST COMPATIBILITY SUMMARY

AIRCRAFT	WING STATION	WING SWEEP	SINGLE MODULE	TWO MODULES	THREE MODULES	FOUR MODULES	SPRAY CONTAMINATION
F-4	1		Yes	No[d]	Yes[a]	No[d]	Questionable
F-4	2		Yes	No[d]	Yes	No[d]	None
F-100	1		Yes	Yes	No[c]	No[c]	Probable
F-100	2		Yes	No[d]	No[c, d]	No[c, d]	Probable
F-100	3		See Note b	No[c, d]	No[c, d]	No[c, d]	None
F-105	1		Yes	Yes	Yes	Yes	Possible
F-105	2		Yes	No[c, d]	No[c]	No[c, d]	None
F-111	1	26°	Yes	Yes	Yes	Yes	Probable
F-111	2	26°	Yes	Yes	Yes	Yes	Possible
F-111	3	26°	Yes	Yes	Yes	Yes	None
F-111	4	26°	Yes	Yes	Yes	Yes	None
F-111	1	72.5°	Yes	Yes	No[d]	No[d]	Probable
F-111	2	72.5°	Yes	Yes	Yes	Yes	Probable
A-1	1		Yes	No[d]	Yes[a]	No[d]	None
A-7	1		Yes	Yes	No[d]	No[c, d]	Probable
A-7	2		Yes	Yes	Yes	Yes	Probable
A-7	3		Yes	Yes	Yes	Yes	None

Notes:

[a] Requires Short Fins On Bottom, Long Fins On Top

[b] Station Not Recommended Due To Possible Short Fin/Aileron Interference

[c] Weight Incompatibility

[d] Physical Incompatibility

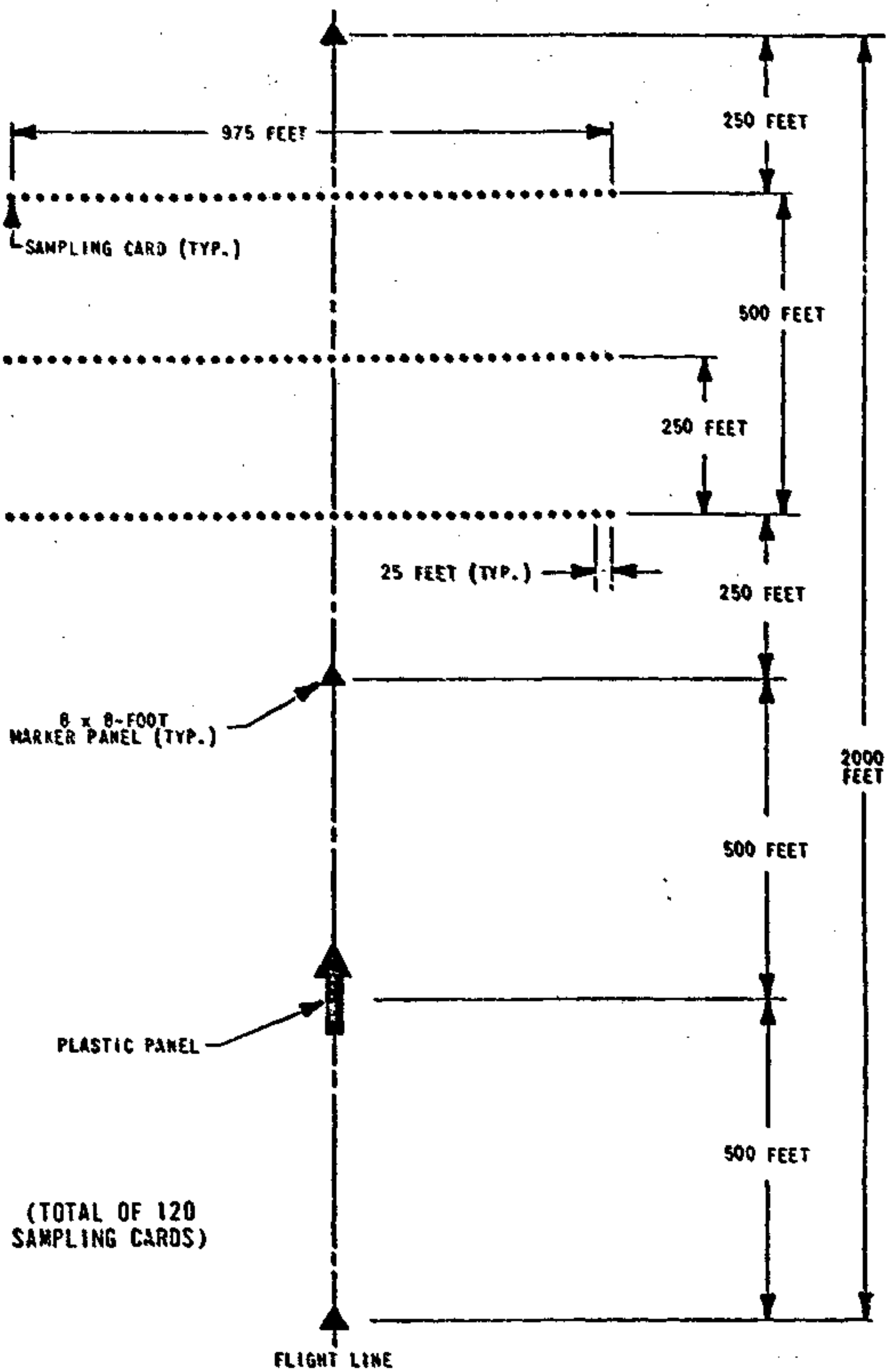

Figure 52. PAU-8/A Drop Zone Layout

TABLE X. PAU-8/A SPRAY TESTS RESULTS

RUN NUMBER	DATE	AIRCRAFT	WIND VELOCITY (MPH)	WIND DIRECTION*	SURFACE TEMPERATURE (°F)	AIRCRAFT SPEED (KIAS)	AGENT OR SIMULANT	FLOW RATE (GPM)	NOZZLE (TABLE XI)	DROPLET SIZE (µm)	REMARKS
[illegible]	[illegible]	F-51	12	S	78	217	EG	83	[illegible]	333	Surface Wind Too High For Good Data
[illegible]	[illegible]	F-51	0		[illegible]	217	EG	83	2	233	GFE Module And Controls
[illegible]	[illegible]	F-51	0		[illegible]	217	EG	112	3	329	
[illegible]	[illegible]	F-51	3	E	[illegible]	351	EG	83	2	[illegible]	
[illegible]	[illegible]	F-51	3	E	[illegible]	351	EG	112	3		
4	7-10-68	F-51	3	E	[illegible]	351	EG	[illegible]	4	240	
[illegible]	7-10-68	F-51	3	E	[illegible]	370	EG	[illegible]	4	226	
[illegible]	7-10-68	F-51	10	E	88	361	EG	82	5	[illegible]	
[illegible]	7-10-68	F-51	10	E	88	361	EG	35	5		
[illegible]	7-10-68	F-51	10	E	88	217	EG	82	5	[illegible]	
[illegible]	7-10-68	F-51	10	E	88	217	EG	39	6		
8	[illegible]	F-51	6	E	92	359	EG	80	7	372	
[illegible]	[illegible]	F-51	0		[illegible]	356	EG	83	7	220	
[illegible]	[illegible]	F-51	2	-	77	217	EG	80	7	254	
[illegible]	8-5-69	F-51	1	-	78	364	FO	23	8	87	
[illegible]	8-5-69	F-51	1	-	76	364	FO	23	9	72	
[illegible]	8-5-69	F-51	1	-	77	220	FO	23	8	87	
[illegible]	8-5-69	F-51	1	-	77	220	FO	23	9	87	
13	8-5-69	F-51	1	-	80	221	FO	33	10	80	
[illegible]	8-5-69	F-51	1	-	80	221	FO	31	11	73	
14	8-5-69	F-51	1	-	82	369	FO	30	10	-	
14	8-5-69	F-51	1	-	82	369	FO	31	11		
[illegible]	8-7-69	F-51	4	E	78	364	FO	62	12	82	
[illegible]	8-7-69	F-51	[illegible]		82	220	FO	62	12	97	
[illegible]	10-3-69	F-86	2	E	74	205	G	45	13	[illegible]	
[illegible]	10-3-69	F-86	2	E	74	205	FO	44	14	95	
[illegible]	10-3-69	F-86	2	E	75	503	G	45	13	189	
[illegible]	10-3-69	F-86	2	E	[illegible]	503	FO	44	14	69	
[illegible]	10-4-69	F-86	1	S	54	158	TKPP	44	14	230	
[illegible]	10-4-69	F-86	1	S	54	158	FO	40	13	103	
[illegible]	10-4-69	F-86	0		58	504	TKPP	44	14	155	
[illegible]	10-4-69	F-86	0		58	504	FO	40	13	69	GFE Module And Controls
[illegible]	[illegible]	F-51	NA		NA	218	EG	25	15	223	SFE Module (Tank) With New Design Controls
[illegible]	[illegible]	F-51	NA		NA	341	EG	25	15	225	
[illegible]	[illegible]	F-51	NA		NA	214	EG	75	16	242	
[illegible]	[illegible]	F-51	NA		NA	364	EG	75	15	[illegible]	
[illegible]	[illegible]	F-51	NA		NA	364	EG	150	17	208	GFE Module (Tank) With New Design Controls
[illegible]	[illegible]	F-51	NA		NA	215	EG	150	17	325	
[illegible]	[illegible]	F-51	2	S	45	216	B	150	18	-	New Design Module Complete
[illegible]	[illegible]	F-51	2	S	45	356	B	150	18	-	
[illegible]	[illegible]	F-51	0	-	60	222	B	75	19	327	
[illegible]	[illegible]	F-51	0	-	60	358	B	75	19	293	
[illegible]	[illegible]	F-51	4	NE	74	349	B	150	19	[illegible]	
[illegible]	[illegible]	F-51	4	NE	75	218	B	150	18	[illegible]	
[illegible]	[illegible]	F-51	2	NE	59	214	O	150	[illegible]	[illegible]	
[illegible]	[illegible]	F-51	2	NE	[illegible]	349	O	150	[illegible]	[illegible]	New Design Module Complete

*Flight Path North To South
EG - Ethylene Glycol 1.11 SG (Specific Gravity)
FO - #1 Fuel Oil 0.8[illegible] SG
G - Glycerol [illegible] Glycerine 1.25 SG
TKPP - Tetra Potassium Pyrophosphate
(40% Solution in Water) 1.4 SG

B - Blue 1.34 SG
O - Orange 1.20 SG
W - White 1.14 SG
NA - Not Available During Test

TABLE X. PAU-8/A SPRAY TESTS RESULTS (CONCLUDED)

RUN NUMBER	DATE	AIRCRAFT	WIND VELOCITY (MPH)	WIND DIRECTION	SURFACE TEMPERATURE (°F)	AIRCRAFT SPEED (KIAS)	AGENT OR SIMULATE	FLOW RATE (GPM)	NOZZLE (TABLE XI)	DROPLET SIZE	REMARKS
35	9-18-69	F-51	10	S	70	221	O	25	20	231	New Design Module Complete
36	9-18-69	F-51	10	S	70	354	O	25	20	100	↑
37	9-19-69	F-51	0		50	217	W	150	18	112	
38	9-19-69	F-51	0	-	50	366	W	150	18	134	
39	9-19-69	F-51	1	NE	54	223	W	25	20	196	
40	9-19-69	F-51	1	NE	54	342	W	25	20	107	
41	9-19-69	F-51	4	W	67	223	W	75	19	243	
42	9-19-69	F-51	4	W	67	333	W	75	19	146	
43	9-20-69	F-51	3	SE	52	223	O	25	20	163	
44	9-20-69	F-51	3	E	52	369	O	25	20	118	
45	9-20-69	F-51	0	-	60	224	O	75	19	156	↓
46	9-20-69	F-51	0		60	343	O	75	19	137	New Design Module Complete

Flight Path North To South
EG - Ethylene Glycol 1.11 SG (Specific Gravity)
FO - Jet Fuel 0-1 0.83 SG
G - Glycerol (90% Glycerine) 1.25 SG
TKPP - Tetra Potassium Pyrophosphate (40% Solution In Water) 1.45 SG
B - Blue 1.34 SG
O - Orange 1.28 SG
W - White 1.14 SG
NA - Not Available During Test

TABLE XI. NOZZLE DESCRIPTIONS

NOZZLE NUMBER	NAME	ORIFICE			REFERENCE FIGURE
		NO.	SIZE OR SETTING (INCHES)	INJECTION ANGLE WITH HORIZONTAL	
1	Test Nozzle No.1	12	0.25 Diameter	0° Aft	12
2	Test Nozzle No.1	12	0.25 Diameter	90° Down	12
3	GFE	32	0.25 Diameter	0° Aft	13
4	Test Nozzle No.1	2	0.25 x 1.875 Slot	90° Down	12
5	Test Nozzle No.1	192	0.062 Diameter	90° Down	12
6	GFE	32	0.10 Diameter	0° Aft	13
7	Test Nozzle No.1	192	0.062 Diameter	0° Aft	12
8	Test Nozzle No.2	2	0.281 Diameter	20° Up And Down	14A
9	Test Nozzle No.2	1	0.391 Diameter	0° Aft	14B
10	Test Nozzle No.2	1	0.391 Diameter With Deflection	30° Down	14C
11	Test Nozzle No.2	1	0.187 x 0.675 Slot	90° Down	14D
12	Test Nozzle No.2	1	0.186 x 1.50 Slot	90° Down	14E
13	Test Nozzle No.3	1	0.75 Diameter[a]	0° Aft	15A
14	Test Nozzle No.3	1	0.50 Diameter[a]	0° Aft	15B
15	Prototype No.3	1	No. 2	0° Aft	18
16	Prototype No.3	1	No. 8	0° Aft	18
17	Prototype No.3	1	No. 14	0° Aft	18
18	Production	1	No. 1	0° Aft	19 & 53
19	Production	1	No. 5	0° Aft	19 & 53
20	Production	1	No. 13	0° Aft	19 & 53

[a] Flow Rate Controlled Up Stream With An Orifice.

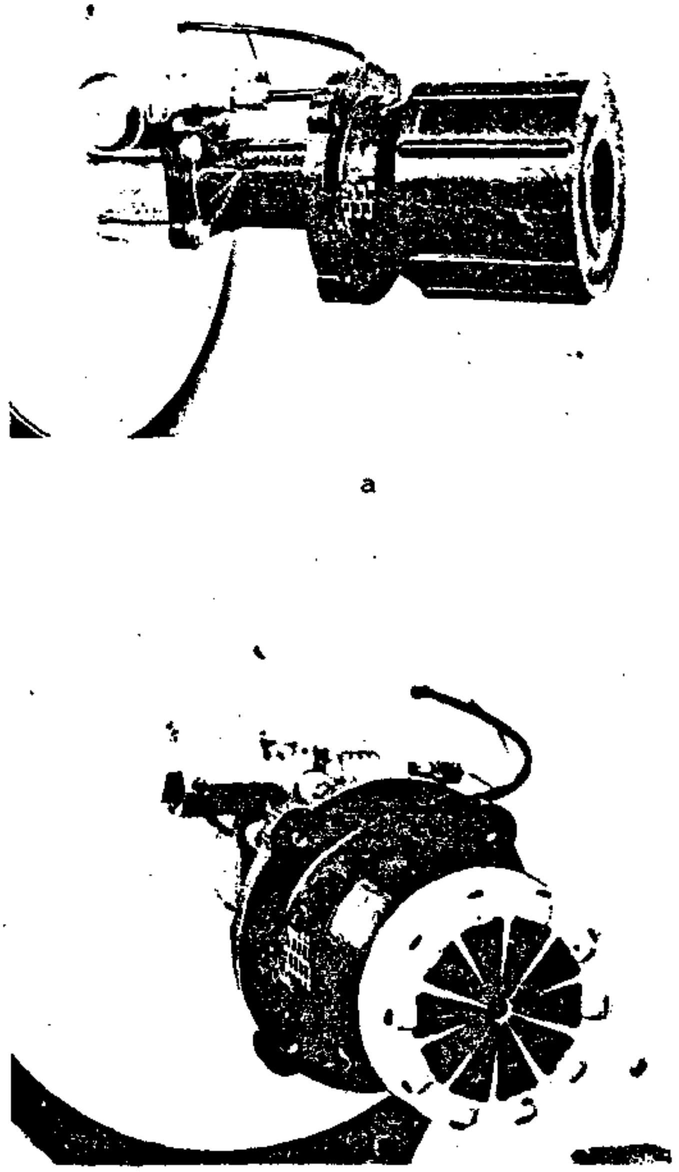

a

b

Figure 53. Production Nozzle

SECTION X

MAINTAINABILITY AND RELIABILITY

10.1 MAINTAINABILITY

The maintainability program for the PAU-8/A Spray Tank consisted of maintainability analysis, troubleshooting analysis, maintainability parameter predictions, and preventative maintenance. These four analyses combine to form a major indicator of system effectiveness.

10.1.1 Maintainability Analysis

The first step of the maintainability analysis was to define the operating environment and conditions. The system has been designed to operate on a variety of aircraft, but this will not be a maintainability constraint since the operational procedures for the system are independent of the type of aircraft. The varied weather conditions will not impose any maintainability constraints as long as the agent does not freeze in the tank.

A set of maintenance and preflight operational procedures, based on qualitative maintainability requirements and constraints, was devised to form a base for the quantitative analysis. These procedures and associated assumptions are as follows:

- A preventative maintenance schedule will be followed for all units.
- The modules will be configured and prepared for mounting at the maintenance facility.
- The system will be mounted and the functional verification test will be performed using the dispenser test unit.
- Any failure during the functional test that is due to a component failure will require system removal for bench repair.
- Failures due to non-defective components, i.e., improper hook-up, etc., will be corrected on-line and the functional test repeated.

- After successful completion of the functional test and after the pressure reservoir is charged, the agent tank is filled.

The maintenance strategy adopted is to make repairs at the component level. This means that if a valve fails, the valve is replaced but not repaired at the field maintenance shop level. If the valve is to be repaired, it will be done at a higher level in the maintenance hierarchy. This strategy was adopted after considering the characteristics of the system, skill level of the maintenance personnel, and available tools and equipment.

The only special equipment needed at the field maintenance shop level will be the functional verification (dispenser test) unit which is supplied. A rack, stand, or loading and handling adapter will be needed to hold the modules for shop maintenance. The personnel skill requirements should easily be met by Air Force mechanical or electrical technicians. The system design is such that one person will be able to carry out the preventative maintenance steps or correct a malfunction with proper technical data support.

10.1.2 Troubleshooting Guide

A troubleshooting guide (Figure 54) was developed to give structure to the maintainability prediction. A schematic of the system (Figure 55) is the major path. If the system is operational, there is no deviation from this path. Branching from the major path is necessary when a failure is encountered. The branching continues until the cause of the failure is determined. After the fault is found and corrected, the technician is directed back to the start of the functional test to verify system operation.

As previously stated, the troubleshooting strategy is to replace components with no attempt to fix them at the field level of the maintenance hierarchy. Since it is likely that some of the malfunctions will be due to clogged lines and valves, all of the failures may not require component replacement. It is possible that cleaning the component which has been isolated by using the troubleshooting guide and the line leading in and out of the component will correct the problem. As a preventative maintenance measure, the lines and O-rings associated with a component should be cleaned whenever the component is removed for inspection or when it is replaced.

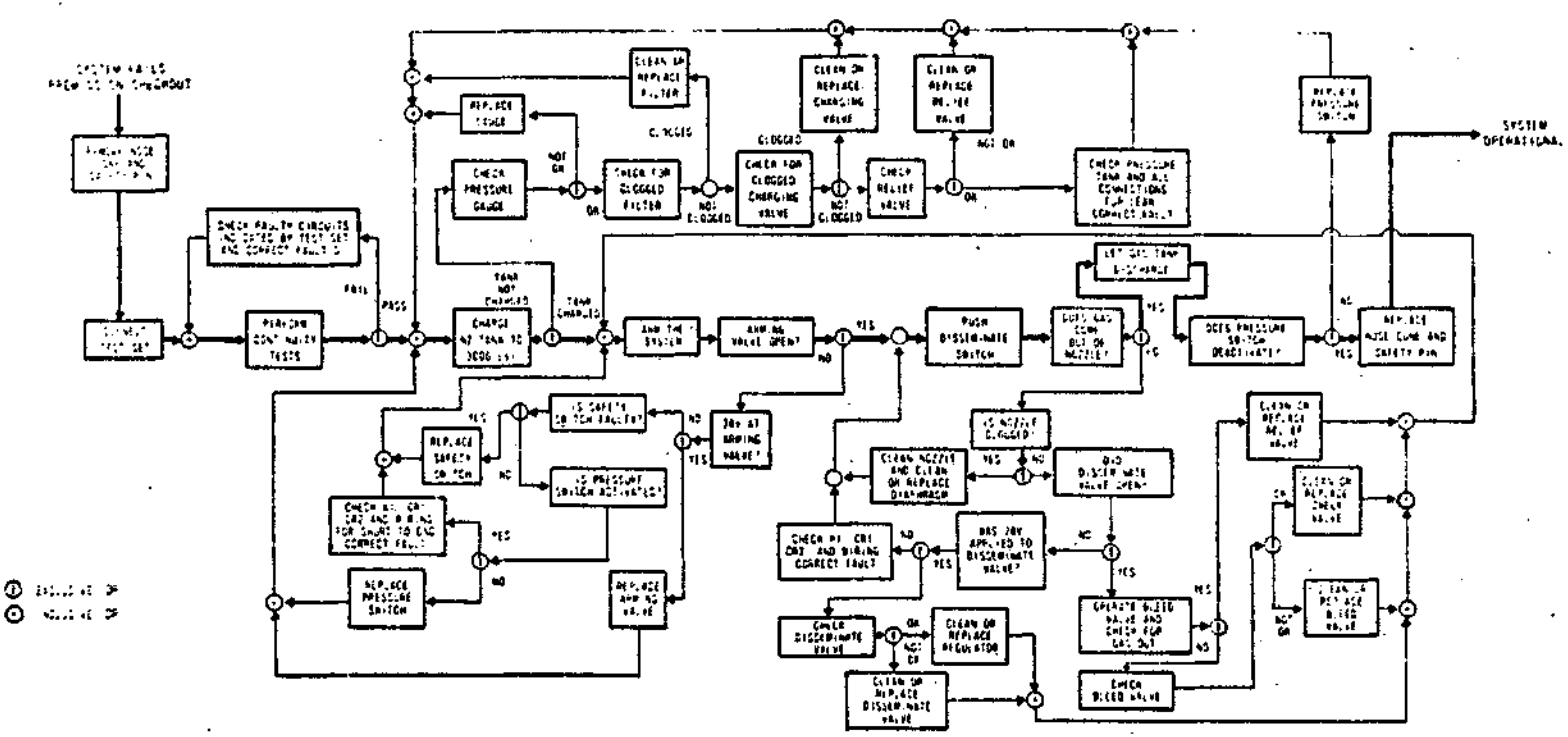

Figure 54. Functional Level Troubleshooting Guide

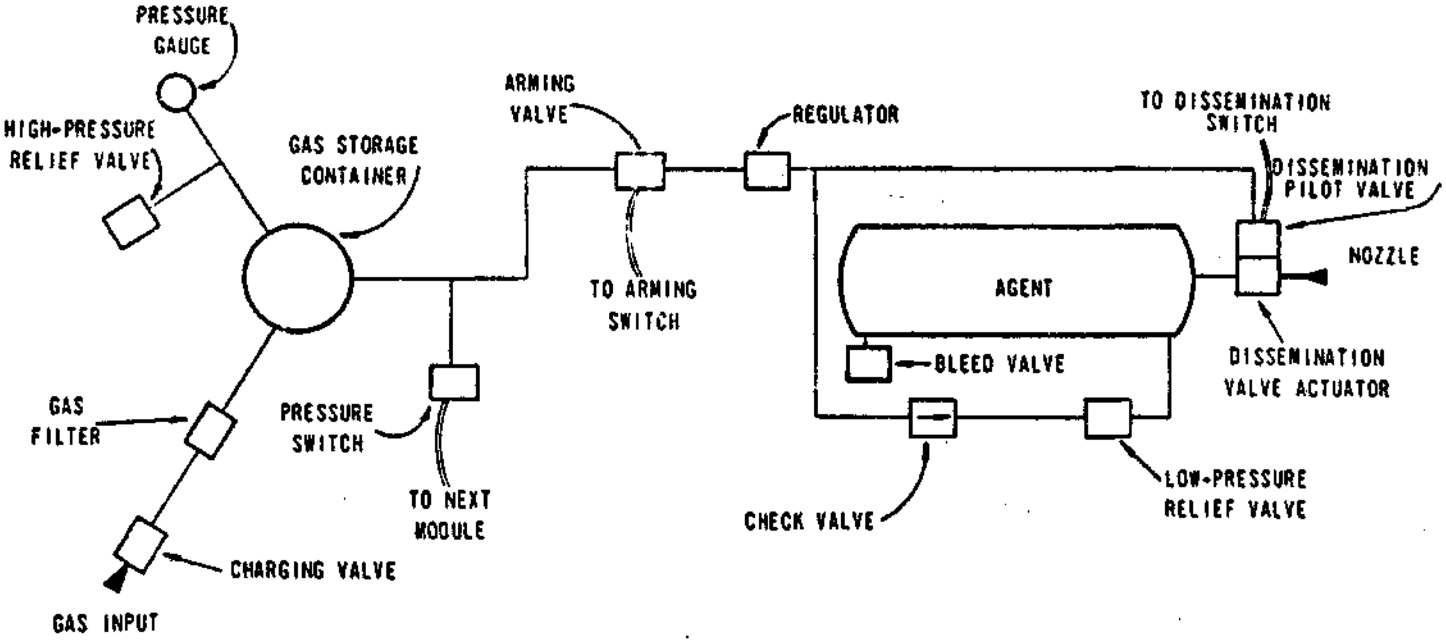

Figure 55. System Schematic

10.1.3 Maintainability Prediction

The calculated mean-time-to-repair (MTTR) for the PAU-8/A is 44 minutes. The maintainability data and the calculations are given in paragraph 10.1.5. The task times used for calculating the MTTR are composed of fault location time, fault correction time, and fix verification time. The fault location times are based on following the troubleshooting guide; the fault correction times are estimated. Since the MTTR is well below the three-hour specified requirement, measurements of component removal and replacement times were not necessary to ensure compliance with the maintainability specification. The system design is such that all components except one are readily accessible when the nose cone is removed. This easy access is the reason for the low MTTR. The only component that requires removal of another component for access is the 10-micron gas filter. The charging valve must be removed before the filter can be changed. This good maintainability design is the result of using the manifold in the pneumatic system. The manifold eliminates a considerable amount of tubing and fittings, thereby increasing the reliability and enhancing the maintainability of the system.

10.1.4 Preventative Maintenance

The preventative maintenance requirements for the system have been minimized by careful design. Hermetically sealed relays are used to eliminate any periodic maintenance for the electrical system. Mesh filters are used in the fill ports to prevent large particles from getting into the system and clogging pneumatic lines and valves.

It appears that the unit will not require any special periodic maintenance. The one possible exception to this will be the gas filter which may require periodic replacement or cleaning during use. The diaphragm in the nozzle assembly will require periodic inspection during use. Accelerated life tests indicate that the diaphragm should withstand 1200 to 1500 cycles at maximum opening of 150 GPM and more cycles at a lesser flow rate.

10.1.5 Maintainability Data and Calculations

The maintainability data is presented in Table XII. This data is used to calculate mean-time-to-repair (MTTR) from the following formula:

$$\mathrm{MTTR} = \frac{\sum_i \lambda_i t_i}{\Sigma \lambda i}$$

λi and t_i are the failure rate and task time, respectively, for the ith component. When there is more than one of a particular component and the task time is the same for all of them, the failure rate can be multiplied by the quantity. The summation is overall maintainable components. The MTTR is calculated for a four module assembly:

$$\Sigma n_i \lambda_i = 5305$$

The n_i is included since the repair time for all components will be the same in each module.

$$\Sigma n_i \lambda_i t_i - 230,114$$

Therefore,

$$\mathrm{MTTR} = 43.5$$

Since the task times are estimates, only two significant digits will be retained. The MTTR will, therefore, be 44 minutes.

10.2 RELIABILITY

The first step in the reliability analysis is to define the mission and to specify what constitutes a mission failure. Mission failure is specified as "any malfunction that may cause mission degradation". A sample mission profile is shown in Figure 56. For the reliability analysis, the mission can be

TABLE XII. MAINTAINABILITY DATA

COMPONENT	QUANTITY (n)	FAILURE/ RATE (λ)	TASK TIME (t) (MIN.)	nλt	% OF TOTAL MAIN. TIME
Pressure Switch	4	240.9	39	37,700	16.40
Arming Valve	4	257.3	37	38,000	16.50
Regulator	4	277.0	58	64,200	28.00
Connector J1, P1	4	9.6	48	1,845	0.80
Connector J2, P2	4	7.2	48	1,380	0.60
Diode	8	0.8	36	230	0.10
Relay K1	4	9.3	45	1,670	0.75
Selector Switch	4	2.0	53	424	0.18
Safety Switch	4	24.3	32	3,050	1.32
Filler Caps	8	24.3	6	1,105	0.48
Strap	4	6.1	10	244	0.11
Bolt	4	1.3	7	37	0.02
Charge Valve	4	12.2	26	1,270	0.55
Relief Valve (High Pressure)	4	20.0	33	2,640	1.15
Filter	4	6.0	26	624	0.27
Pressure Gauge	4	10.0	33	1,320	0.57
Pressure Vessel	4	5.4	69	1,495	0.65
Check Valve	4	13.1	40	2,100	0.91
Bleed Valve	8	12.2	41	4,000	1.74
Relief Valve (Low Pressure)	4	20.0	35	2,800	1.22
Diaphragm	4	48.0	22	4,230	1.84
Dissemination Valve	4	282.0	53	59,750	25.90

	TIME (MINUTES)	
(1) TAKEOFF		
(2) CLIMB	0.4	
(3) CRUISE (OUTBOUND)	20.0	
(4) DESCENT	1.4	
(5) DELIVERY	4.0	(WORST CASE: 4 MODULES SEQUENTIAL)
(6) CLIMB	9.0	
(7) CRUISE (INBOUND)	20.0	
(8) DESCENT	2.2	
(9) LAND		

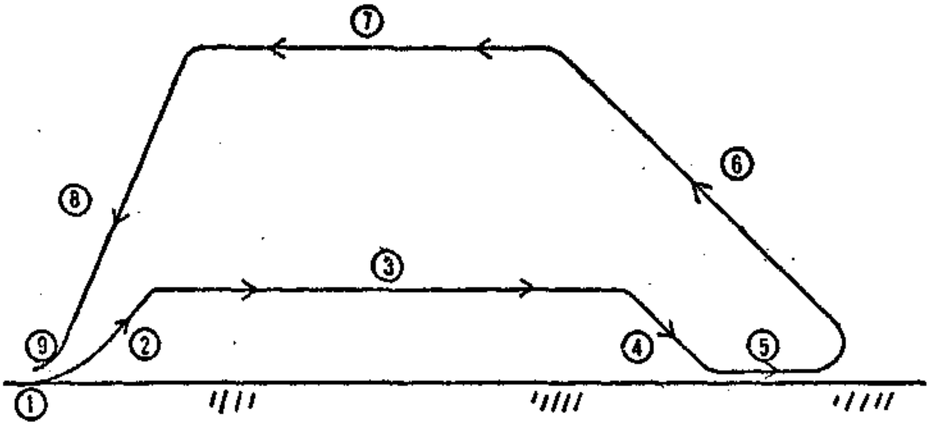

Figure 56. Mission Profile for Sequential Dissemination

considered complete after segment five. The four-module sequential mode of operation was selected since it is the highest stress mode from a reliability point of view.

The reliability model developed for the system is shown in Figure 57. The model is based on a functional partitioning of the system. For this sequential model, the probability of success is the product of the success probability of each subsystem; i.e.,

$$P_S = P_A P_B P_C P_D P_E P_F P_G \quad (1)$$

(P_x is the probability of successful mission operation of the <u>xth</u> subsystem.)

Two assumptions that affect the reliability analysis are made. The first assumption is that all required periodic preventative maintenance will be done. The second assumption is that for all missions, the modules will be given the preflight checkout using the dispenser test set. A functional flow diagram of the preflight procedure is shown in Figure 58. This assures that the system is operational just prior to use, thereby allowing the reliability calculations to be made using operational time only.

The data and the calculations for the probability of success for each module are given in paragraph 11.2.1. The results of the calculations are presented in Table XIII.

TABLE XIII. SUCCESS PROBABILITIES FOR SUBSYSTEMS

$P_A = 0.99987$

$P_B = 0.99999$

$P_C = 0.99989$

$P_D = 0.99989$

$P_E = 0.99934$

$P_F = 0.99845$

$P_G = 0.99989$

A. MODULE STRUCTURE

B. MATING ASSEMBLY

C. HIGH PRESSURE SYSTEM

D. LOW PRESSURE SYSTEM

E. NOZZLE AND DISSEMINATION SYSTEM

F. ARMING AND REGULATING SYSTEM

G. ELECTRICAL CONTROL SYSTEM

Figure 57. Reliability Model

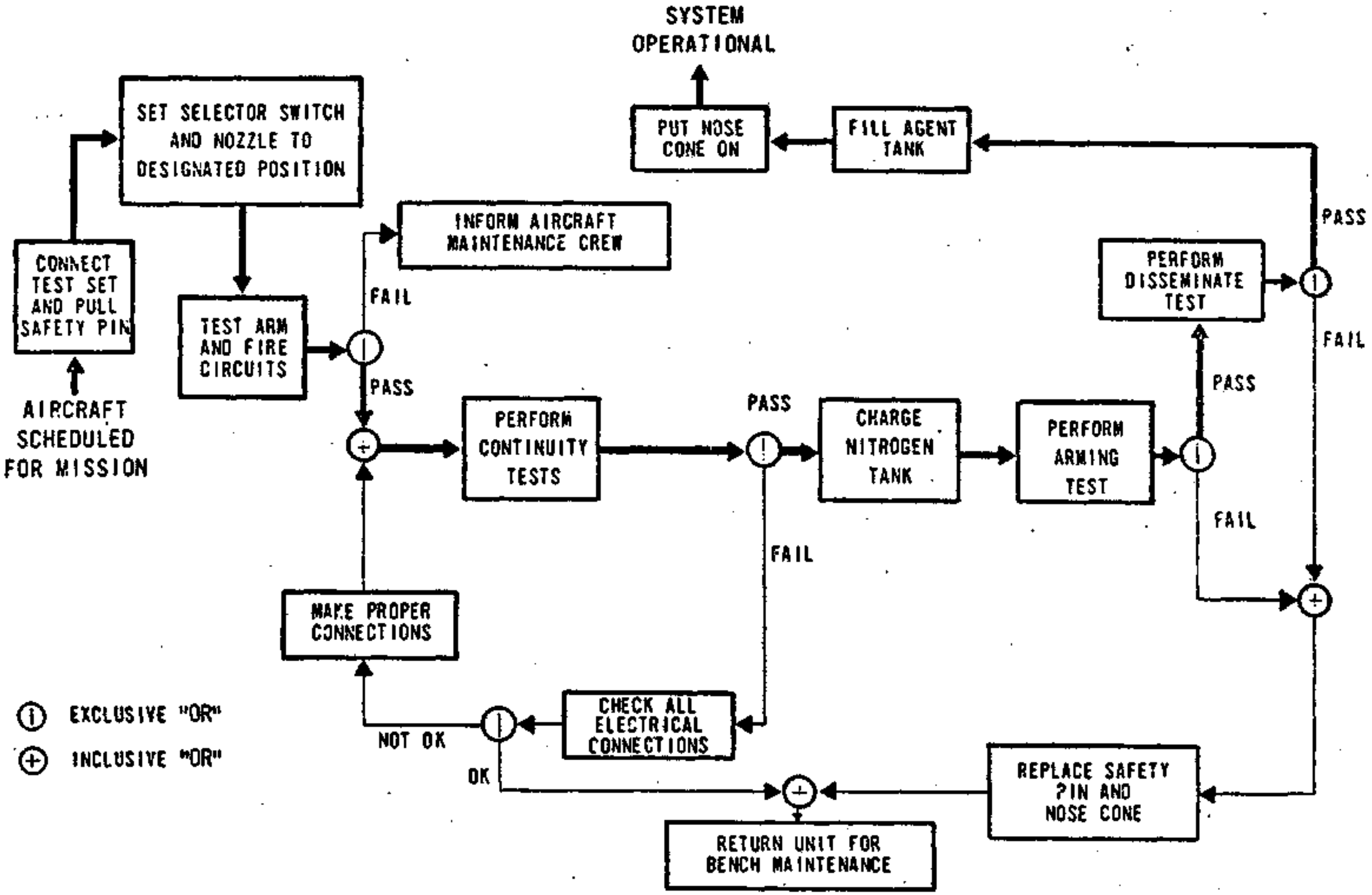

Figure 58. Line Checkout and Preparation Procedure

From the data in Table XIII, the probability of mission success can be calculated, using Equation (1). The result is $P_S = 0.997$. This would give a failure rate of 0.3 percent, which is well under the ten percent specified in the contract.

It is at this point that the implications of a development versus a production contract become important. The failure rate calculated above is based on a development contract where all of the units are inspected and tested. On a production basis, the failure rate could be higher since sampling techniques will be used for inspection and testing. In fact, since the inherent reliability is so high, a key factor in selecting sample size for the production testing will be the minimum acceptable failure rate.

The inherent reliability of the module structure, i.e., welds and material, is so high that it has a negligible contribution to the probability of failure. This high inherent reliability is due to the large safety factors used in the design. These high safety factors are a result of strict adherence to the design criteria in MIL-A-8591 and the need to maintain structural integrity under the severe test conditions specified in MIL-STD-810.

This high structural reliability is achieved as long as 100 percent inspection of material and joints is done. With anything less than 100 percent inspection there is the possibility of a module with a bad weld or inferior material being shipped to the field. If this happens the achieved field reliability may be reduced. This distinguishes the field reliability from the design reliability. The reliability figure used in this report is a design reliability where 100 percent inspection was conducted.

10.2.1 Reliability Data and Calculations

The reliability data is presented in Table XIV. The data was gathered and developed from the following sources:

- MIL-HDBK-217A, Reliability Stress and Failure Rate Data for Electronic Equipment.

- Bureau of Naval Weapons Failure Rate Data Handbook (FARADA), Volumes 1A and 1B

TABLE XIV. RELIABILITY DATA

COMPONENT	QUANTITY n_i	OPERATING TIME t_i (HOURS)	FAILURE RATE FAIL/10^6 HOURS λ_i	$n_i \lambda_i t_i$	REMARKS
Functional Unit Module Structure					
Filler Caps	8	0.5	24.3	97.2	
Tank	4	0.5	18.7	37.4	Approx. Of Agent Tank
				134.6	
Functional Unit Module Adapter					
Strap	4	0.5	6.1	12.2	
Bolt	4	0.5	1.3	2.6	
				14.8	
Functional Unit High-Pressure System					
Charge Valve	4	0.5	12.2	24.4	
Relief Valve	4	0.5	20.0	40.0	
Gas Filter	4	0.5	6.0	12.0	
Pressure Gauge	4	0.5	10.0	20.0	
O-Rings	4	0.5	5.4	10.8	
(Total For System)	10	0.5	0.2	1.0	
				108.2	
Functional Unit Low-Pressure System					
Check Valve	4	0.5	13.1	26.2	
Bleed Valve	8	0.5	12.2	48.8	
Relief Valve	4	0.5	20.0	40.0	
				115.0	
Functional Unit Nozzle And Disseminator Assembly					
Diaphragm	4	0.5	48	96	
Dissemination Pilot Valve	4	0.5	282	564	
				660	
Functional Unit Arming And Regulating System					
Pressure Switch	4	0.5	240.9	481.8	
Solenoid Valve	4	0.5	257.3	514.6	
Regulator	4	0.5	277.0	554.0	
				1550.4	
Functional Unit Electrical Control System					
Connector J1	4	0.5	9.6	19.2	8 Pins Used
Connector J2	4	0.5	7.2	14.4	6 Pins Used
Diodes CR 1, 2	8	0.5	0.8	3.2	
Relay K1	4	0.5	9.3	18.6	
Selector Switch	4	0.5	2.0	4.0	
Safety Switch	4	0.5	24.3	48.6	
				108.0	

- Timmerman, P., Fault Data for the Prediction of Reliability of Electronic and Mechanical Equipment and Systems, Danish Atomic Engergy Commission Technical Report, February 1968.

In cases where specific data could not be obtained, the similar equipment procedures as specified in MIL-HDBK-217A were used.

SECTION XI

SUMMARY

The basic modular configuration was defined in the contract. The design evaluation was centered on improving the general design furnished under a previous contract. Improvements have been obtained in the areas of cost, more controlled flow conditions throughout the dissemination cycle, center of gravity control, reliability, maintainability and weight reduction.

The PAU-8/A Spray Tank consists of four modules, which are constructed to allow the system to be used in one-, two-, three-, or four-module configurations where aircraft pylon characteristics are limited by maximum weight, ground clearance, etc.

The design and development effort resulted in a modular system which has an empty weight of 225 pounds per module, has flow rates of 15 to 150 gallons per minute per module, can be externally carried and operated on high and low performance aircraft, contains 50 gallons per module, and is structually sound and aerodynamically stable.

Flow models of the internal sections of the agent tanks which simulated the GFE furnished tanks and the proposed design were constructed to study the flow problems within the tanks.

Several test and prototype nozzles were fabricated and evaluated during development to ensure nozzle simplicity and reliability.

Other equipment designed, developed, fabricated, tested, and delivered to support the PAU-8/A were the loading and handling adapter for use with the MJ-1 and the MHU-83/E bomb lift trucks, dispenser test sets to preflight check the modules and the arm and fire circuit of the aircraft as well as operate the modules for static ground operations, temporary storage and shipping containers, and an adapter kit to reduce spray contamination of the F-4 aircraft.

Wind tunnel tests and jettison tests provided data to establish aerodynamic stability and an adequate safety margin for jettison on all configurations.

Aircraft compatibility studies were made with layouts and full scale mock-ups of the PAU-8/A on the F-4, F-100, F-105, F-111, A-1E, and A-7 aircraft.

Flight tests to study nozzle design, air flow, and the complete system were made on F-51 and F-86 aircraft with a single, full-scale module and a 65 percent scale of the two-module configuration.

Material compatibility studies were made to determine what metals could be used in contact with the agents. Studies were also made to determine what materials could be used to coat the metal to protect it from the effects of the agents.

Eight complete four-module systems have been fabricated and delivered to the Air Force for R & D Engineering Evaluation.

(The reverse of this page is blank)

Distribution List
Not Filmed

Page 159

UNCLASSIFIED
Security Classification

DOCUMENT CONTROL DATA - R & D

(Security classification of title, body of abstract and indexing annotation must be entered when the overall report is classified)

1. ORIGINATING ACTIVITY (Corporate author) Defense Technology Laboratories FMC Corporation San Jose, California	2a. REPORT SECURITY CLASSIFICATION UNCLASSIFIED 2b. GROUP

3. REPORT TITLE

SPRAY TANK UNIT, AIRCRAFT, PAU-8/A

4. DESCRIPTIVE NOTES (Type of report and inclusive dates)
Final Report - 17 May 1968 through 28 February 1971

5. AUTHOR(S) (First name, middle initial, last name)
John J. Harrington

6. REPORT DATE April 1971	7a. TOTAL NO. OF PAGES 136	7b. NO. OF REFS
8a. CONTRACT OR GRANT NO. F08635-68-C-0090 b. PROJECT NO. Task No. 07 c. d. Work Unit No. 00	9a. ORIGINATOR'S REPORT NUMBER(S) 9b. OTHER REPORT NO(S) (Any other numbers that may be assigned this report) AFATL-TR-71-46	

10. DISTRIBUTION STATEMENT
TEST + EVALUATION
Distribution limited to U. S. Government agencies only; ~~this report documents the design, development, fabrication, and testing of military hardware~~; distribution limitation applied April 1971. Other requests for this document must be referred to the Air Force Armament Laboratory (DLIF), Eglin Air Force Base, Florida 32542.

11. SUPPLEMENTARY NOTES Available in DDC	12. SPONSORING MILITARY ACTIVITY Air Force Armament Laboratory Air Force Systems Command Eglin Air Force Base, Florida 32542

13. ABSTRACT

A modular spray system for anticrop chemicals was designed, developed, fabricated and tested. The system is capable of external carriage on high and low performance aircraft in four possible configurations using either one, two, three, or four modules. Each of the 50-gallon modules is completely interchangeable and can spray at rates from 15 to 150 gallons per minute. The modules use a compressed-air/gas reservoir to pressurize the agent reservoir and force the agent out the nozzle. Support equipment, designed and delivered with the dispenser, included the loading and handling adapter kit for the MJ-1 and MHU-83E bomb lift trucks, the checkout unit, and the anticontamination kit for use with the F-4 aircraft. Nozzle tests were conducted from aircraft at 198 to 504 knots. Droplet sizes of 105 to 555 micron mmd were obtained with the single module configuration at air speeds of 214 to 354 knots. Full scale flow model tests of the agent tank lead to the development of a module which expels 99 percent of the agent from the module at a flow rate of 150 gallons per minute. Scale wind tunnel and jettison flight tests were conducted to support the design of a stable two-module configuration.

DD FORM 1 NOV 65 1473

UNCLASSIFIED
Security Classification

UNCLASSIFIED
Security Classification

14. KEY WORDS	LINK A		LINK B		LINK C	
	ROLE	WT	ROLE	WT	ROLE	WT
PAU-8/A						
Aircraft Spray Tank Unit						
Dispenser Test Unit						
Anticrop Dispenser						
Anticrop Chemical Agents						
MJ-1 Bomb Lift Truck						
MHU-83/E Bomb Lift Truck						

UNCLASSIFIED
Security Classification

END

DATE
FILMED

4—72